# GT86 CS-V3

Cup

# 2014 User Manual

Toyota Motorsport GmbH
Version: V03 (26.07.2014)

## Contents

## Forward

This technical manual is intended as a basis for **TMG GT86 CUP** vehicles, which is identical to the Toyota GT86 in the context of the VLN race.

The following documentation and rules serve as a basis for the technical specifications of the vehicles:

- Technical manual **GT86 CUP** 2014
- Announcement **GT86 CUP** 2014
- Announcement **VLN Endurance Championship** at the Nürburgring 2014 and its technical regulations
- Applicable rules and regulations in the **DMSB Handbook 2014**
- On request published/to be published **GT86 CUP Bulletins**

This technical manual has been written with great care. In case of doubt or interpretation problems please contact the following representatives:

Toyota Motorsport GmbH
Tel.: 02234-1823 0
Email: motorsport@toyota-motorsport.com

IK Media GmbH
Tel.: 09122-985 183
Email: tmg-gt86Cup@ikmedia.de

## General Information:

The GT86 CS-V3 is a race car for classes with near-production regulations. Some components, therefore, correspond to the series car and not to motorsport development or application.

We ask that this be taken into consideration when using the vehicle. Special attention is required, especially in relation to loading and maintenance of individual components.

# 0 Technical Data

| | |
|---|---|
| Approved model code (basic vehicle) | ZN6-*K*8 or ZN6-*L*8 |
| | |
| Engine | 4 cylinder Boxer motor (FA20) |
| Fuel injection system | Direct injection D-4S-System |
| Bore and stroke | 86.0 x 86.0mm |
| Performance | approx. 200 PS at 7000 U/min |
| Torque | approx. 205 Nm at 6400…6600 U/min |
| Engine management system | Toyota OEM (TMG update) |
| Exhaust system | HJS Motorsport Type |
| Exhaust manifold **TMG Option Part** | Standard or DYXAJ276019-00-A01 |
| Fuel tank | 50 ltr. (Standard) |
| Starter motor | 12 V 1,0 kW |
| Firing order | 1 – 3 – 4 – 2 |
| | |
| Drive | Rear wheel drive |
| **Transmission** | 6-speed, synchronised TL70 (Standard) |
| Rear axle differential (Standard) | Standard i = 3,727 FD20A |
| Rear axle differential **TMG Option Part** | Torsen LSD i = 4.100 FD20AT |
| | |
| Front suspension | MacPherson struts |
| Rear suspension | Double wishbone |
| Shock absorbers & springs | Bilstein |
| Front stabiliser **TMG Option Part** | Ø 18 mm (Standard)<br>Ø 20 mm, adjustable |
| Rear stabiliser **TMG Option Part** | Ø 14 mm (Standard)<br>Ø 16 mm adjustable |
| Front disc brakes | Ø 294x24 mm vented |
| Rear disc brakes | Ø 286x10 mm non-vented |
| Steering | Electrically assisted |
| Wheel rims | OZ 8x17" ET50 |
| Tyres | PIRELLI 245/620 R17 (slick & rain) |
| | |
| Data recording **TMG Option Part** | AIM evo4 incl. display |
| | |
| Front axle camber | Adjustable (see 3.4.2) |
| Rear axle camber | Non-adjustable (see 3.4.3) |
| | |
| Overall length | 4240 mm |
| Width (max) | 1775 mm |
| Wheelbase | 2570 mm |
| Ride height | Adjustable |
| | |
| Average fuel consumption (VLN) | 0,26-0,28 ltr/km |
| | |
| Minimum weight **GT86 CUP 2014** | **1215kg** (see announcement) |
| | |

## 0.1 Vehicle Setup

The Cup car is delivered with the following setup that is also recommended as a basis.

# Setup Sheet

| | | | | |
|---|---|---|---|---|
| race | | | | |
| date | | | | |
| driver | | | | |
| engineer | | | | |
| distance | race distance | h | done | km |
| weather | | | | |
| track condition | | | | |
| temp. ambiente | | | | |
| temp. track | | | | |

| | | |
|---|---|---|
| rim | | **OZ Racing 8"x17" ET50** |
| tyre | **x** | **Pirelli 245/620-17 DH (slick)☐** |
| | | **Pirelli 245/620-17 WH (rain)** |
| RR diff | **x** | **Standard i = 3,727** |
| | **(x)** | **Torsen i = 4,100** |

| | front | | rear | |
|---|---|---|---|---|
| shock absorber adjustment | compression | rebound | compression | rebound |
| | **5** clicks | **5** clicks | **5** clicks | **5** clicks |
| spring (main) | **140 kg/cm** | | **180 kg/cm** | |
| spring (helper) | **150 lb/in** | | **150 lb/in** | |
| spring seat height | **35 mm** | | **105 mm** | |
| camber | **-3° 3'** | | **(-1° 25') *none adjustable** | |
| toe | **2 mm OUT(-)** | | **2 mm IN (+)** | |
| ride height | **568 mm** | | **555 mm** | |
| brake pads | **PFC 08 18mm** | | **PFC 08 18mm** | |

| weight | | | | |
|---|---|---|---|---|
| driver: | kg kg | kg | according to configuration |
| 75 kg | kg kg | kg | |
| fuel: | | | |
| 5 ltr | | | V2 |

# 1 Engine

## 1.1 FA20-engine

The FA20 4-stroke engine is a 2-liter DOHC Boxer with four cylinders and 16 valves. In the superior version this 4-stroke Otto motor works with a direct fuel injection and variable valve timing.

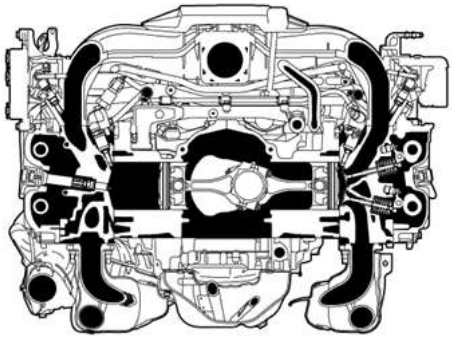

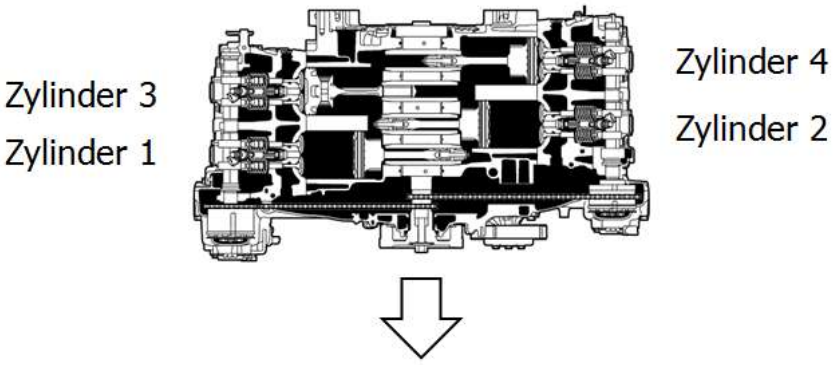


| | |
|---|---|
| Number of cylinders and disposition | 4-cylinder-Boxer motor |
| Valve train assembly | 16 valve, DOHC, chain drive (with variable valve timing) |
| Fuel system | D-4S |
| Capacity | 1998 $cm^3$ |
| Max. power [EEC] | 147 kW (200 hp) at 7000 min-1 |
| Max. torque [EEC] | 205 Nm at 6400 - 6600 min-1 |

## 1.2 Engine management system

The engine management system performs an extremely accurate, integrated control of the following systems to achieve high performance, high power delivery, high fuel efficiency and reduced emission:

- 4-stroke-gasoline in a superior-version with direct and sequential multiport fuel injection (D-4S SFI)
- Electronic ignition timing (ESA)
- Intelligent Electronic Throttle Control System (ETCS-i)
- Variable valve timing
- Fuel pump control
- Cooling fan control
- Mixture sensor and control of the Lambda sensor heating
- Diagnosis

Arrangement of the SFI system

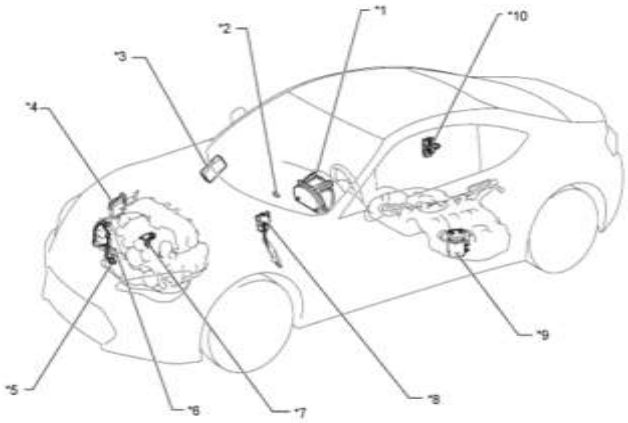


| | | | |
|---|---|---|---|
| *1 | Combination instrument assembly | *2 | DLC3 |
| *3 | ECM | *4 | Injection valve unit (EDU) |
| *5 | Broad band mixture sensor | *6 | Lambda probe |
| *7 | Air suction quantity gauge - subunit | *8 | Accelerator sensor unit |
| *9 | Inlet manifold unit with pump and pressure sensor | *10 | Fuel pump - ECU - unit |

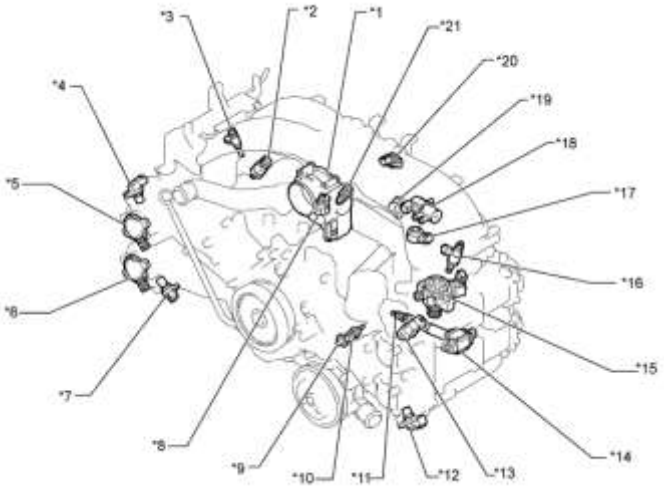


| | | | |
|---|---|---|---|
| *1 | Butterfly valve housing with motor<br>- choke position indicator<br>- choke actuator | *2 | Fuel pressure sensor (for high pressure) |
| *3 | Injection valve unit (for inlet manifold injection) | *4 | Camshaft sensor (R, exhaust) |
| *5 | Oil regulating valve unit (for camshaft adjustment (inlet) | *6 | Oil regulating valve unit (for camshaft adjustment (exhaust) |
| *7 | Camshaft sensor (R, exhaust) | *8 | Knocking sensor (R) |
| *9 | Engine oil pressure switch unit | *10 | Oil temperature sensor |
| *11 | Sparking plugs | *12 | Camshaft sensor (L, exhaust) |
| *13 | Camshaft sensor (L, inlet) | *14 | Ignition coil unit |
| *15 | Fuel pump unit (for high pressure) | *16 | Injection valve unit (for direct injection) |
| *17 | Knocking sensor (L) | *18 | Vacuum switching valve |
| *19 | Crank angle sensor | *20 | Air pressure sensor unit |
| *21 | E.F.I. engine cooling medium temperature sensor | | |

In the CUP version the ECM (Engine Control Module) gets a program update due to the changed exhaust system and catalyst position.

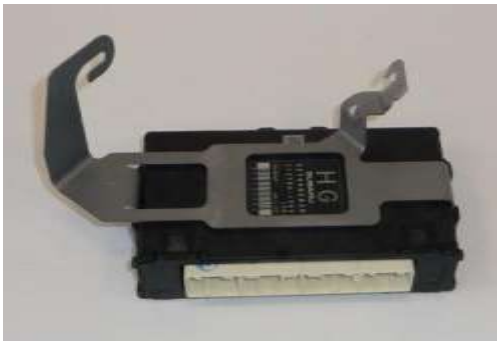

**TMG Race Part** Program update CUP for Series-ECM – TMG part no. DYX00-99547

## 1.3 Fuel Supply

The FA20 is a superior version 4-stroke petrol engine direct fuel injection (D-4S system), which runs with both direct and intake manifold fuel injection.

This system optimally manages the injection valves for the direct injection and intake manifold injection in accordance with the engine load. The system guarantees high engine performance and at the same time fuel efficiency and clean exhaust gases.

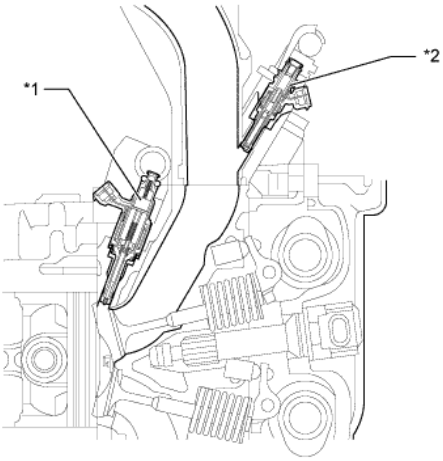


*1 Injection valve unit (for direct injection)

*2 Injection valve unit (for manifold injection)

A non-recirculating fuel supply system has been fitted to reduce vaporised gas emissions

In the event of an airbag being activated a fuel cut-off control stops the fuel pump unit (low pressure).

A fuel injection unit (direct injection) with a slit nozzle is used.

### 1.3.1 D-4-S System

The superior version 4-stroke petrol engine with direct injection (D-4S) employs two fuel injection systems: direct injection and intake manifold injection. Fuel delivered from the fuel tank is fed into the low pressure and high-pressure systems. The fuel delivered to the low-pressure system is injected by the injection valve unit (for intake manifold injection) into the inlet port. The fuel that has been fed into the high-pressure system is pressurised by the fuel pump unit (high pressure) and injected into the combustion chamber by the injection unit (direct injection).

The direct injection system consists essentially of the fuel pump unit (for high pressure), the manifold (direct injection) and the injector unit (direct injection). In this system - on the basis of signals of various sensors - the ECM controls the fuel pump unit (high pressure) and the injector unit (direct injection) through the electronic drive unit (EDU) for the optimum control of fuel pressure, injected amount and injection timing.

The intake manifold injection system basically consists of the intake manifold with pump and pressure sensor unit (low pressure), the fuel pipeline subunit (for intake manifold injection) and the injector unit (for intake manifold injection). In this system, the ECM, based on signals from various sensors (for intake manifold injection), controls the injector unit for the optimal control of injected amount and injection timing.

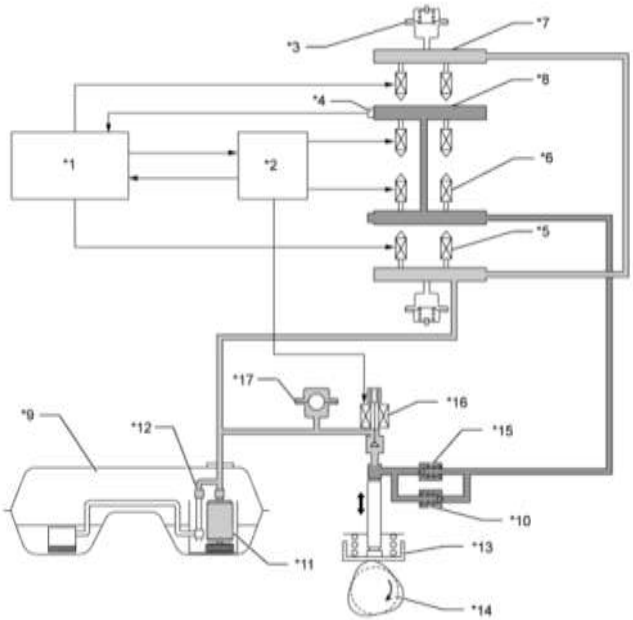


| | | | |
|---|---|---|---|
| *1 | ECM | *2 | Injection unit operator (EDU) |
| *3 | Fuel pulse vaporiser unit | *4 | Fuel pressure sensor |
| *5 | Injection unit (for the manifold injection) | *6 | Injection unit (for the direct injection) |
| *7 | Fuel pipe subunit (for the manifold injection) | *8 | Distributor pipe (for the direct injection) |
| *9 | Fuel tank unit | *10 | Fuel pressure release valve (for high pressure) |
| *11 | Inlet manifold with pump and pressure sensor unit (for low pressure) | *12 | Fuel pressure regulating unit |
| *13 | Fuel pump unit (for high pressure) | *14 | Inlet camshaft (fuel pump drive cam) |
| *15 | Non-return valve | *16 | Overflow valve |
| *17 | Pulsation damper | - | - |
| ☐ | Low pressure fuel | ■ | High pressure fuel |

**Non-recirculating fuel system (for low pressure side)**

A non-recirculating fuel system has been fitted to reduce vaporised gas emissions. As shown below, by installing the fuel filter unit, the fuel pressure regulator unit and the fuel pump, it is possible to interrupt the return of the fuel from the engine area and thus prevent a rise in temperature within the fuel tank unit. The formation of vaporised gases in the fuel tank is thus reduced.

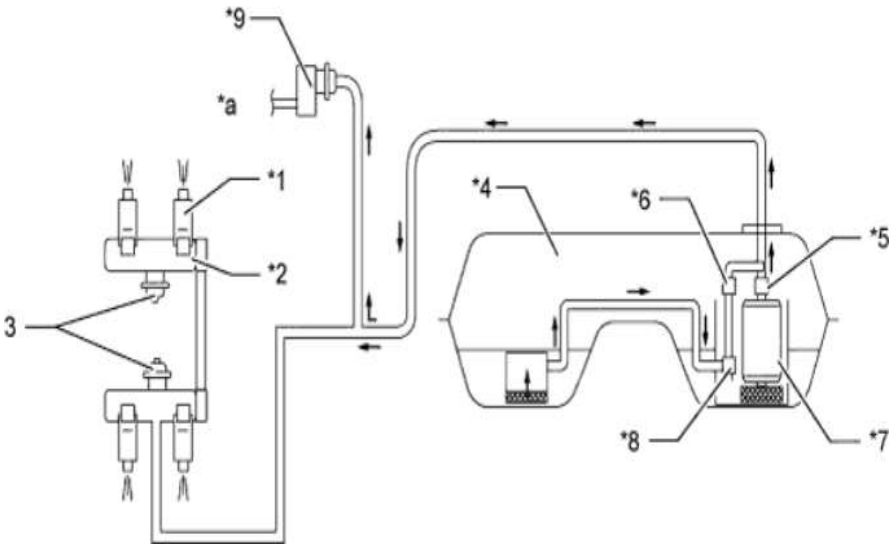


| | | | |
|---|---|---|---|
| *1 | Injection unit (for the manifold injection) | *2 | Distributor pipe subunit (for the manifold injection) |
| *3 | Fuel pulse vaporiser unit | *4 | Fuel tank unit |
| *5 | Fuel filter unit | *6 | Fuel pressure regulating unit |
| *7 | Inlet manifold with pump and pressure sensor unit (for low pressure) | *8 | Jet pump |
| *9 | Fuel pump unit (for high pressure) | - | - |
| *a | To the high pressure fuel system | - | - |

## 1.4 Cooling

The cooling system is a pressurised forced circulation system. The radiator expansion tank is not pressurized.

A version is used with lower bypass and thermostat with a bypass valve mounted on the water pump assembly.

The outlet end of the heating tube has been fitted with a bleed valve to reduce the air reservoir.

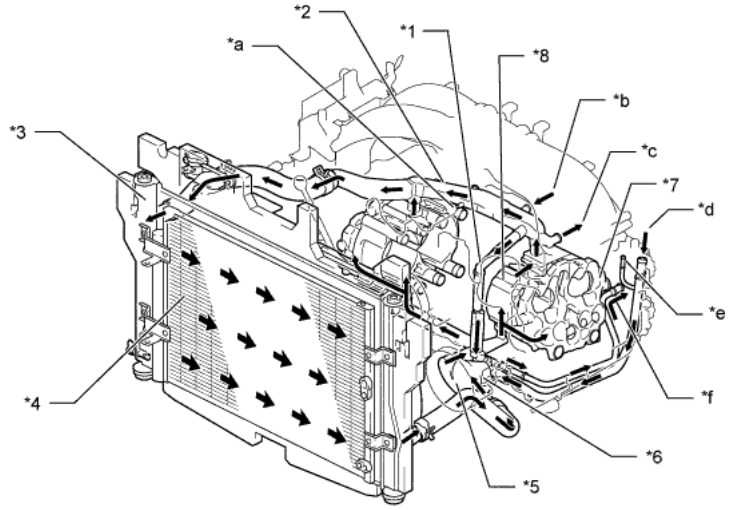


| | | | |
|---|---|---|---|
| *1 | Lower by-pass pipe | *2 | Water inlet pipe |
| *3 | Radiator assembly | *4 | Radiator condenser unit |
| *5 | Engine water pump unit | *6 | Thermostat |
| *7 | Cylinder head subunit | *8 | Cylinder block subunit |
| *a | To the butterfly-valve housing unit on motor | *b | From the gearbox oil-cooling unit |
| *C | To the heating heat-exchanger unit | *D | From heating heat-exchanger subunit |
| *E | From the butterfly-valve housing unit on motor | *F | To the gearbox oil-cooling unit |

### 1.4.1 Engine coolant

Toyota's original Genuine Super Long Life coolant (blue), 50/50 premixed (Toyota Genuine Super Long Life Coolant BLUE) is used.

### 1.4.2 Engine coolant type

We recommend using original Toyota Super Long Life Coolant SLLC (or an equivalent) ethylene glycol based coolant without silicate, amines, nitrites or borate.

### 1.4.3 Thermostat

Thermostat opening temperature: 86 °C to 90 °C

### 1.4.4 Water pump

An oil sump subunit has been installed in the water pump unit to drive the fan belt to operate the fan and alternator.

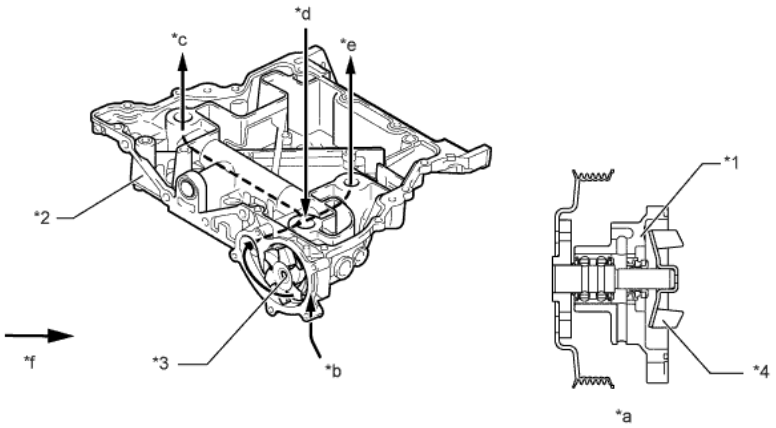

| | | | |
|---|---|---|---|
| *1 | Water pump unit | *2 | Oil sump subunit |
| *3 | Spiral chamber | *4 | Rotor |
| *a | Cross section | *b | From the radiator |
| *C | To the R/H cylinder block subunit | *D | From the lower bypass pipe |
| *E | To the L/H cylinder block | *F | Water flow |

## 1.4.5 Radiator assembly

A lightweight, high-performance radiator with aluminium heat exchanger in cross-flow design has been fitted.

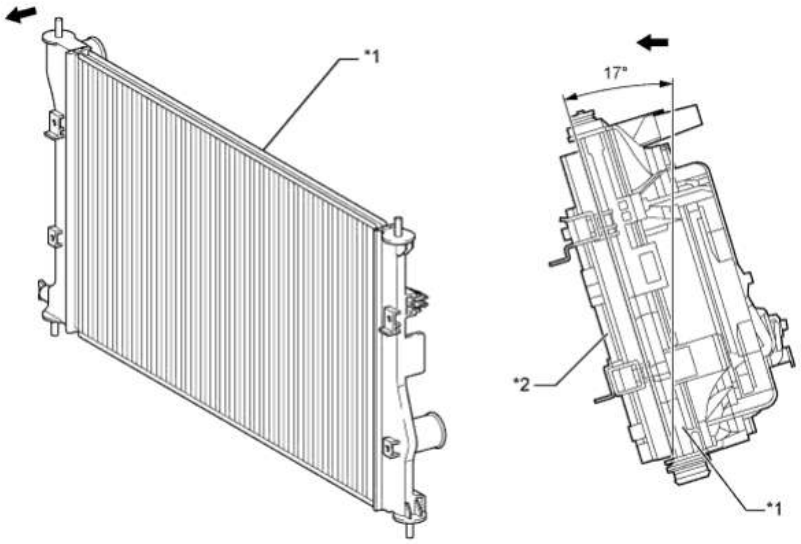

## 1.5 Lubricating system

The lubricating system operates completely under high pressure, and all the oil flows through an oil filter. A rotor pump is used to pump the oil around.

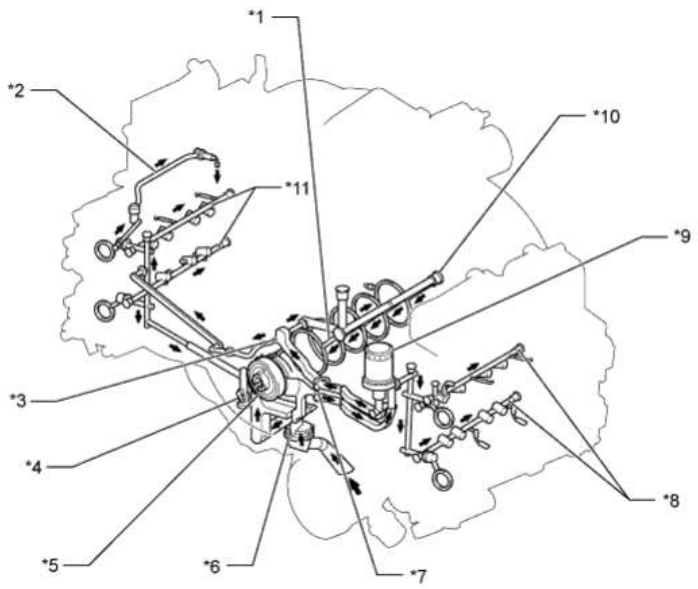


| | | | |
|---|---|---|---|
| *1 | Oil pipeline for the crankshaft journals | *2 | Oil pipeline of the vacuum pump unit (models with automatic gears) |
| *3 | Oil pipeline for the timing chain cover | *4 | Chain tensioner unit no. 1 |
| *5 | Oil pump | *6 | Oil filter sieve - subunit |
| *7 | Chain tensioner no. 2 | *8 | L/H oil pipeline for the camshaft bearing journals |
| *9 | Oil filter | *10 | Main oil passage |
| *11 | R/H oil pipeline for the camshaft bearing journals | - | - |
| ■ | Oil flow | - | - |

## 1.5.1 Oil pump

The oil pump fitted has high-performance splined-rotors that are driven directly by the crankshaft and has a camshaft timing chain and belt cover subunit. The pressure relief valve is now located inside, and a bypass pipe, which prevents separated oil flowing directly into the oil sump, has also been installed. In this way variations of the oil level in the sump can be prevented and friction is reduced.
For the contacting surfaces of the cylinder block, cylinder head and oil sump FIGP seals, with excellent sealing properties, have been used, thus ensuring reliability.
The oil pump in the timing chain or, as the case may be, the fan belt cover subunit, works non-destructively.

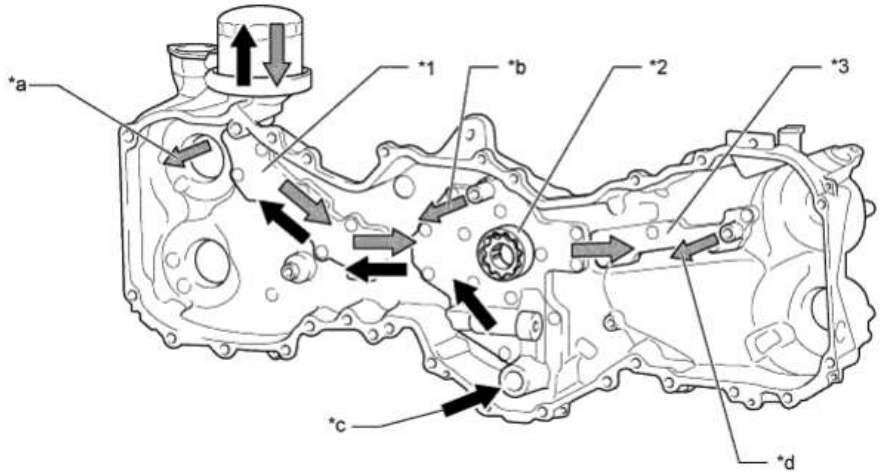


| | | | |
|---|---|---|---|
| *1 | L/H Oil pipeline of the chain cover | *2 | Oil pump rotor |
| *3 | R/H Oil pipeline for the chain cover | - | - |
| *a | To L/H cylinder head | *b | To L/H cylinder block subunit |
| *C | From the oil sump subunit | *D | To the cylinder head subunit |

## 1.5.2 Oil filter

A more compact, lighter oil filter with integrated pressure release valve has been fitted.

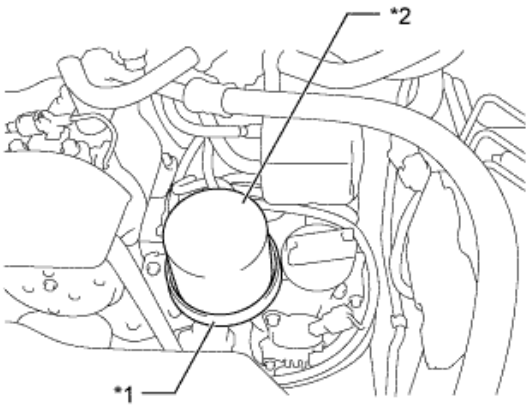


| | | | |
|---|---|---|---|
| *1 | Oil sump | *2 | Oil filter subunit |

## 1.5.3 Engine oil cooling

An **engine oil cooler kit** is available as an option. The kit includes all pipework, adapters, brackets and mounting hardware.

**Engine oil cooling kit**

**Fitted engine oil cooler**

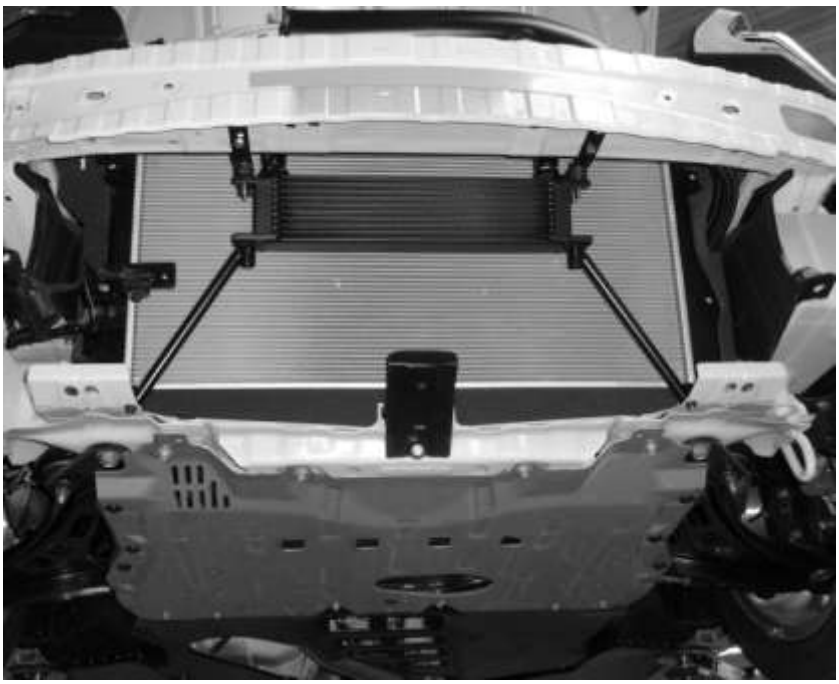

**TMG Option Part** Engine oil cooling kit - TMG part no. DYXAJ195028-00-01

## 1.6 Sound Generator

As standard, the vehicle is equipped with a so-called "Sound Generator", whereby the air intake noise, in a defined frequency range, is ducted into the vehicles interior. This system has been removed. Instead, on the connecting pipe between the air filter housing and throttle, an aluminium stopper has been fitted (see illustration).

**Illustration Sound Generator Replacement**
* All the components (incl. mounting brackets) marked in red have been removed.

N.B. "Verschlusskappe" = end cap

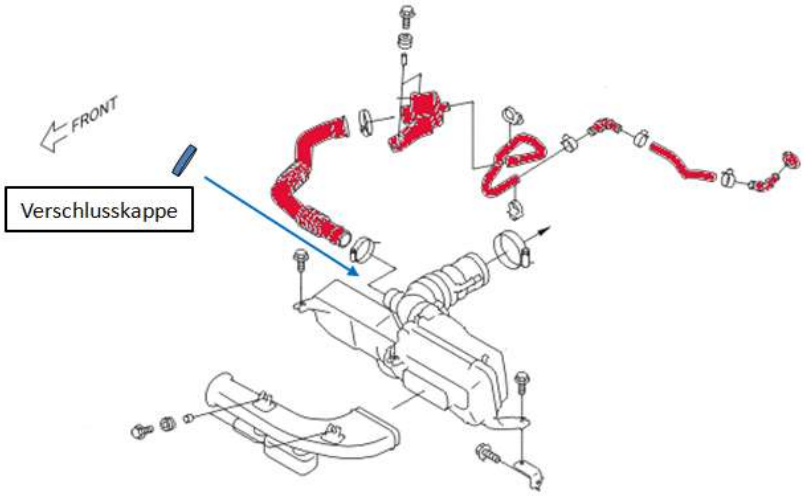


**Illustration: End cap (mounted)**

**TMG Race Part** End cap - TMG part no. DYXAJ273001-00-01

## 1.7 Exhaust system

The standard exhaust system has been removed and replaced by an HJS Motorsport stainless steel exhaust system with two metal cell catalysts on the exhaust end. Accordingly the original cell structure has been removed from the front manifold.

**Exhaust system (3 part)**

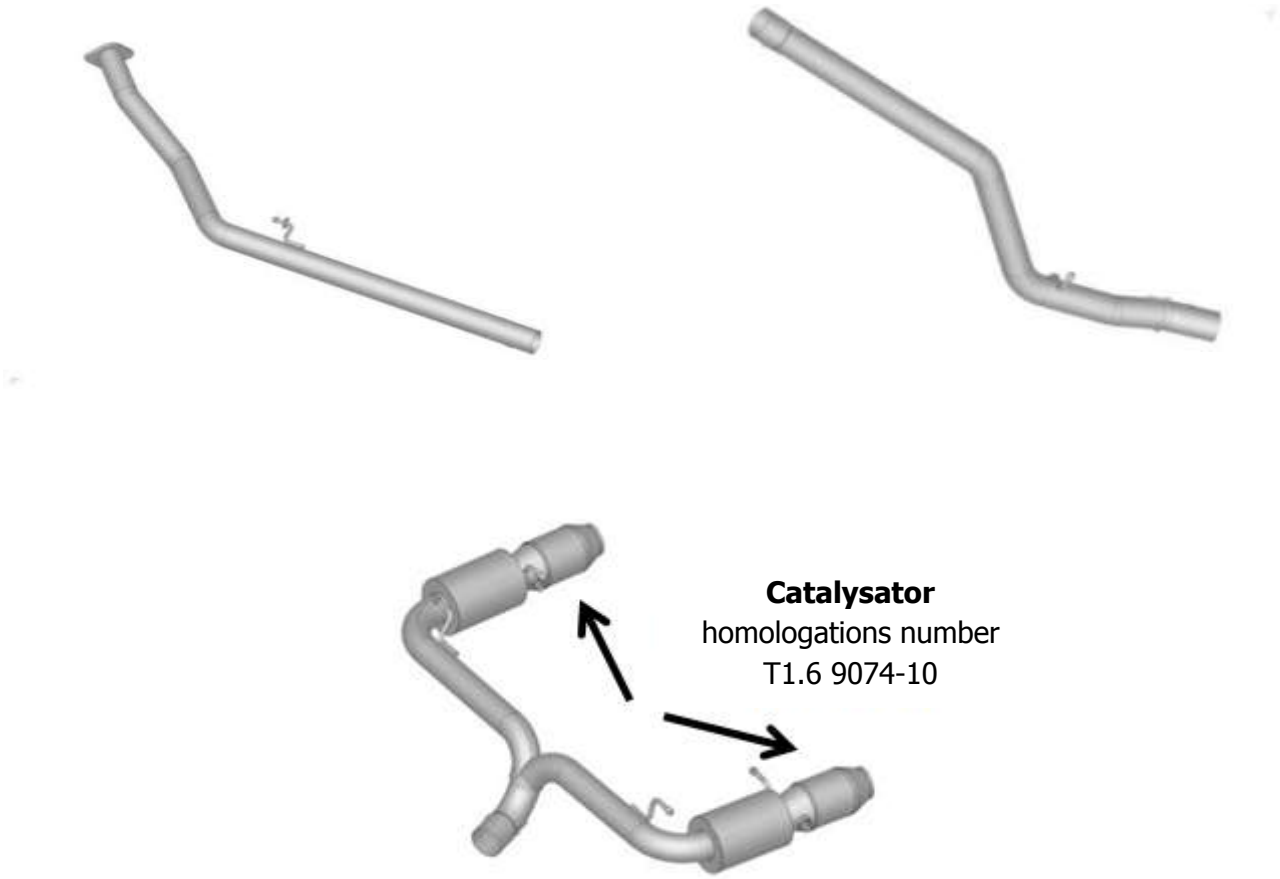


**TMG Race Part** Exhaust system (3 part) - TMG part no. DYXAJ276002-00-01

**TMG Race Part** Exhaust manifold 2014 - TMG part no. DYXAJ276019-00-A01 *w/o illustration

Detailed documentation and software are available in the download area of the online spare parts catalogue.
Access only with username and password

**Mounting kit**

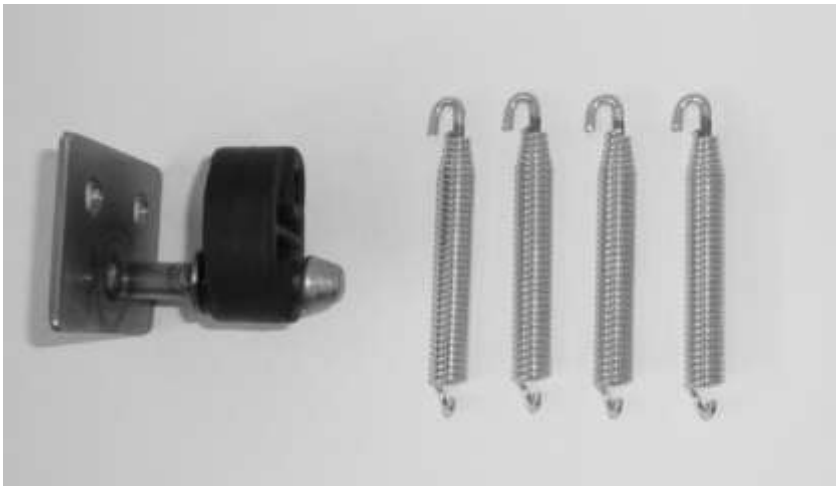

In addition to the original exhaust suspension four safety retainers have been fitted.

**Safety retainers (diverse lengths)**

**TMG Race Part** Kit Safety retainers - TMG part no. DYXAJ276007-00-01

# 2 Drive train

## 2.1 Clutch

A single plate dry clutch is fitted (Toyota OEM), which is operated by hydraulic pressure. An assisting mechanism reduces the force needed to depress the clutch pedal.

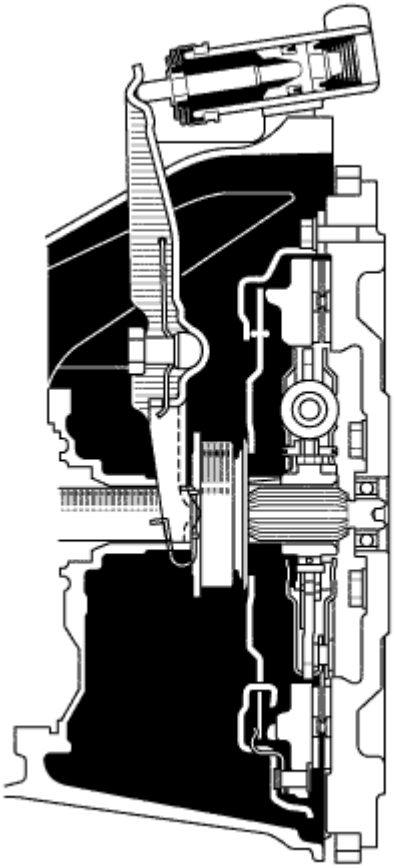

| | | | |
|---|---|---|---|
| Clutch | Type | | Single plate diaphragm spring |
| | Operation | | Hydraulic |
| Clutch cover unit | Size | mm (in) | 230 (9.06) |
| | Installed load | N | 4650 |
| Clutch plate unit | Surface area * | mm (in) | 230 x 155 (9.06 x 6.1) |
| Clutch main cylinder unit | | | Piston type |
| Clutch disengaging cylinder | | | Non-adjustable |
| Clutch pedal | | | Flip mechanism |
| Clutch initiating system | | | Standard- |

## 2.1.1 Clutch housing

Cooling performance and wear resistance of the clutch has been improved by installing a cooling inlet and outlet in the clutch housing of the six-speed manual gearbox, TL70. To seal the clutch housing a waterproof outlet cover has been fitted.

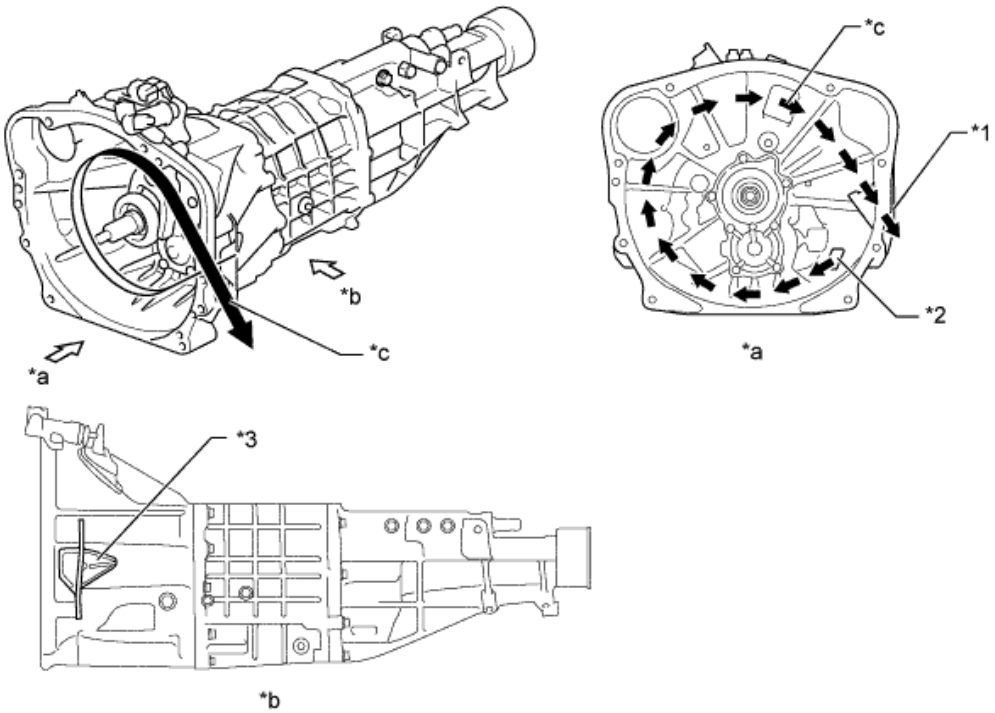


| | | | |
|---|---|---|---|
| *1 | Outlet | *2 | Inlet |
| *3 | Waterproof cover | - | - |
| *a | View A | *b | View B |
| *C | Wind flow | - | - |

## 2.2 Manual transmission

The TL70 is a six-speed manual transmission gearbox.

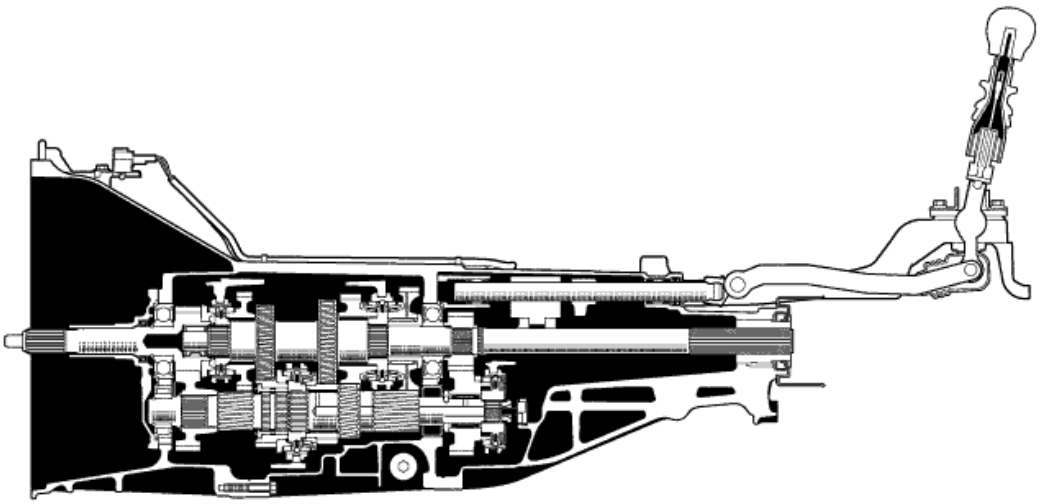

*: The weights quoted are when fully filled with oil.

| | | |
|---|---|---|
| Gearbox type | | TL70 |
| Engine type | | FA20 |
| Gear ratios | 1st | 3.626 |
| | 2nd | 2.188 |
| | 3rd | 1.541 |
| | 4th | 1.213 |
| | 5th | 1.000 |
| | 6th | 0.767 |
| | Reverse | 3.437 |
| Oil capacity litres | (US qts, Imp. qts) | 2.2 (2.3, 1.9) |
| Oil viscosity | | SAE 75W-90 |
| Oil sort | | API GL-3 |
| Weight (reference)* | kg (lbs.) | 42.9 (94.58) |

## 2.2.1 Gear control mechanism

There is a blocking mechanism fitted to reverse gear, which prevents selecting reverse if the releasing collar on the gear stick is not raised.

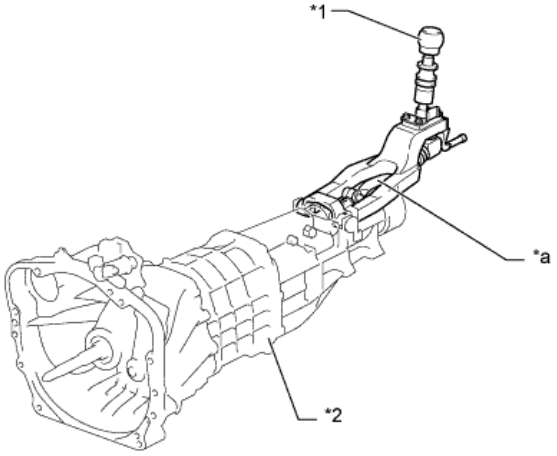


| | | | |
|---|---|---|---|
| *1 | Gear stick grip | *2 | Gearbox unit |
| *a | Semi-direct mechanism | - | - |

A gear lever with a pull ring is used to prevent accidental activation when going forwards or backwards

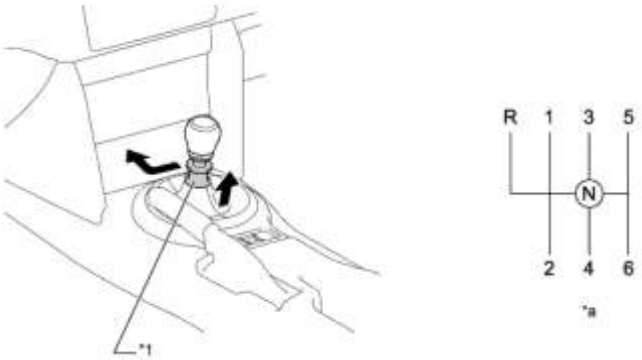


| | | | |
|---|---|---|---|
| *1 | Gear sleeve | - | - |
| *a | Selection diagram | - | - |

## 2.3 Drive shafts

The rear left and right drive shaft units on the axle side have a fixed ball constant velocity joint and on the differential side a constant velocity plunging joint-

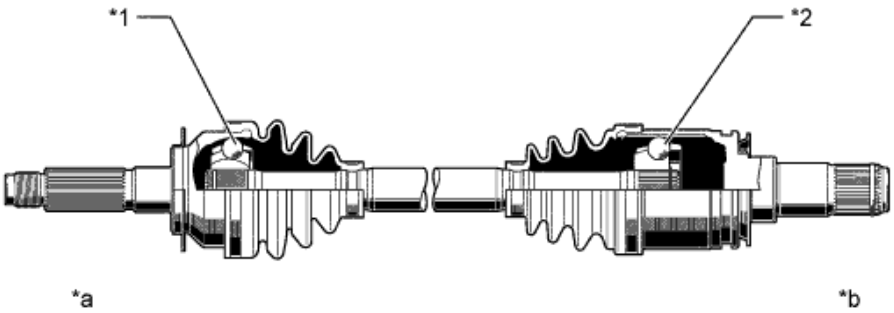


| | | | |
|---|---|---|---|
| *1 | Fixed ball constant velocity joint | *2 | Double offset CVJ |
| *a | Wheel side | *b | Differential side |

**Note:**
The ride height is basically free to choose.
However, a ride height set too low will doubtless influence the wear on the drive shaft.

## 2.4 Prop shaft

A cardan universal shaft with 3 joints is fitted.

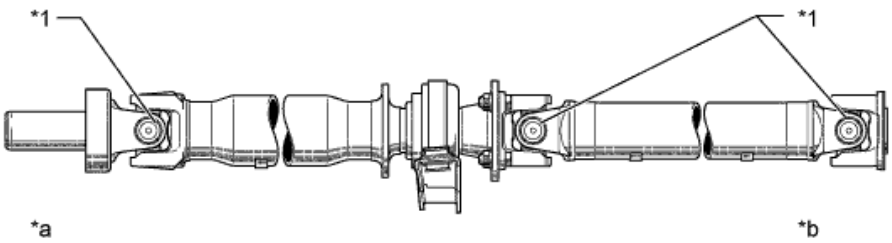


| | | | |
|---|---|---|---|
| *1 | Shell joints | - | - |
| *a | Gearbox side | *b | Differential side |

## 2.5 Rear axle differential

### 2.5.1 Standard rear axle differential

The performance of the standard rear axle differential corresponds to the specifications of the rear axle differential model FDA with a final drive ratio of i = 3.727.

A disc spring (biasing mechanism) provides the differential model for FD20A with improved starting off characteristics on road surfaces with a low µ value.

Multigrade oil with low viscosity is now used for the differential FD20A.

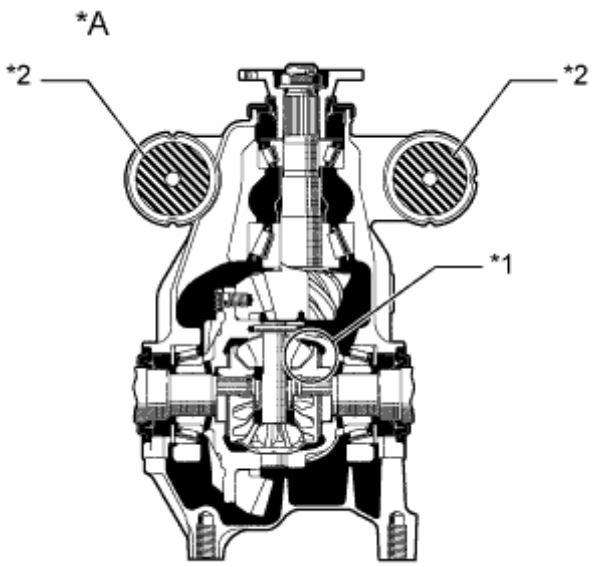


| | |
|---|---|
| *A | Differential type FD20A |
| *1 | Differential pre-torque mechanism |
| *2 | Differential mounting |

**Seal: See paragraph 8.7**

**Note!**
In the standard version from TMG the vehicle comes with the rear axle differential model FD20A (without mechanical locking effect).

## 2.5.2 Torsen limited-slip rear axle differential

A version of the torque-sensitive locking differential model FD20AT (Torsen-LSD) with a final drive ratio of i = 4.100 is an available option.
Due to the optimised blocking effect with the model FD20AT, traction loss can be reduced, which leads to better control of the vehicle.

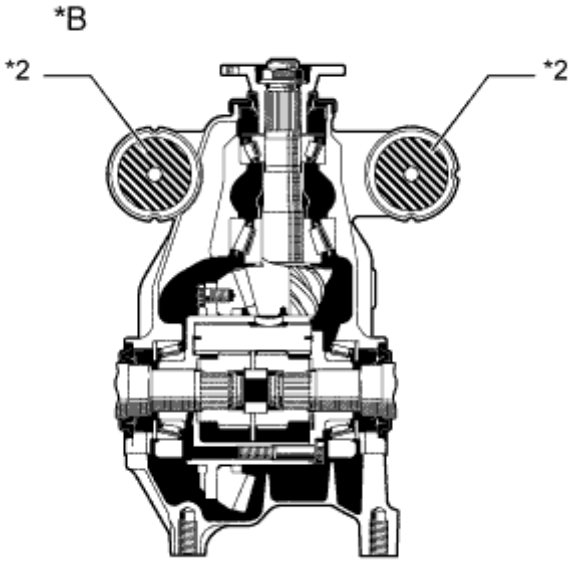


| | |
|---|---|
| *B | Differential type FD20AT i=4.100 |
| *2 | Differential mounting |

**TMG Option Part** Torsen limited slip differential – TMG part no. DYXAJ010005-00-A01

**Seal: See paragraph 8.7**

**Note!**
On vehicles equipped with torque-sensitive limited-slip differential (Torsen-LSD) FD20AT the following is to be taken note of:

- Never transfer driving power if only one wheel has ground contact, and never let a single wheel spin when balancing the wheels on the vehicle. The driving force is transmitted statically to the side opposite the stationary wheel, which can result in the car making a sudden jerk forward. In addition, the differential mechanism will be put under a lot of stress, which can lead to damage.
- The two rear tyres and wheels must be identical in design and size, and the tyre diameters left and right may only have a minimal wear-related difference.

## 2.5.3 Rear axle oil cooling

An oil cooling kit for cooling the oil in the rear axle differential is an available option. The kit contains all the necessary pipework, cooler, mounting, pump, mounting hardware, wiring loom, modified differential housing and pump cover.
The cooler is mounted beneath the floor of the vehicle in the rear part of the boot. The pump and an in-line filter are located in the boot.

**TMG Option Part** Differential oil cooling Kit - TMG part no. DYXAJ181007-00-01

**Rear axle oil cooling Kit**

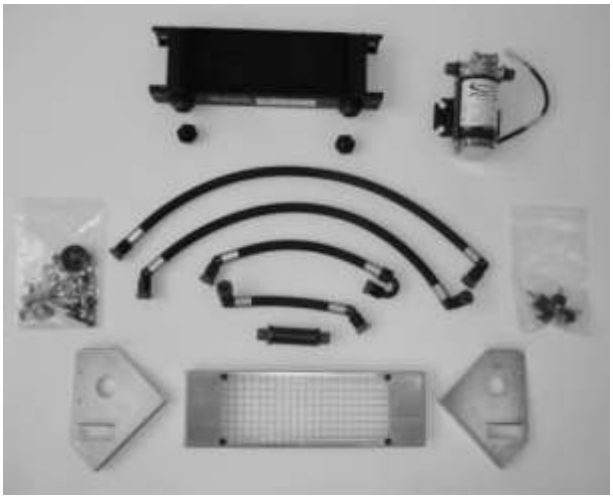

**Modified differential housing cover**

**Pump cover (in the boot)**

**Oil cooler (mounted)**

The pump, and thus the cooling circuit, may be enabled as required, via the fuse in the centre console (left of the gear lever).


There is also an oil filter, with a stainless steel wire filter, in the oil circuit, which should be examined and, if necessary, cleaned after every race.

**In-line oil filter element rear axle oil cooling**

**Position of the oil filter in the rear axle oil cooling**

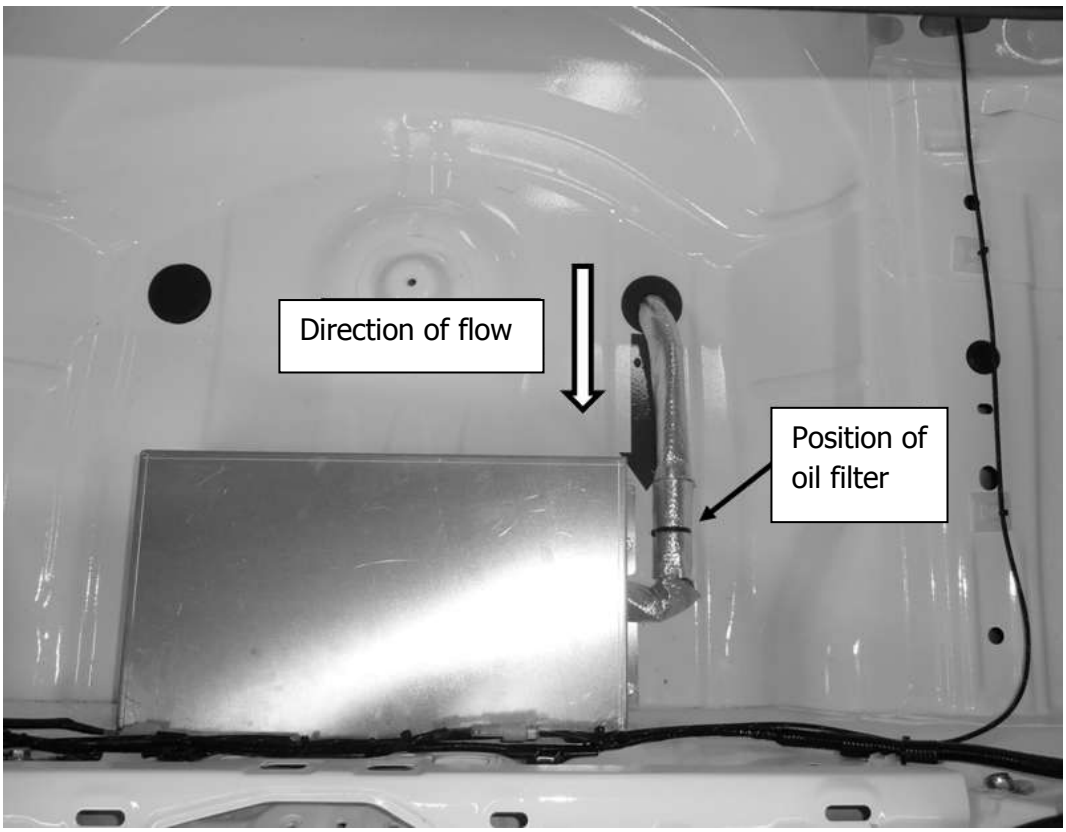

## 2.5.4 Differential oil check and filling for differentials with the optional differential oil cooling

**Rear axle differentials without the differential oil cooling**

As standard both differential versions (standard and Torsen) have a capacity of approx. 1.2 ltr.
The differential oil can be filled through the screw hole of the oil level control.

Unscrew the filler cap of the rear axle differential together with the gasket with a 10mm Allan key.
Check if the oil level is between 0 and 5 mm below the lower edge of the filler screw hole of the rear axle differential. When re-filling, drain via the drain plug and refill via the filler screw hole.

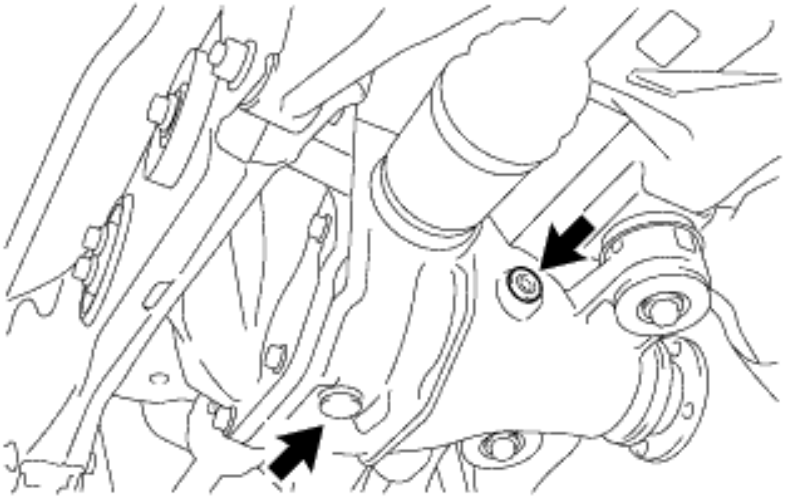

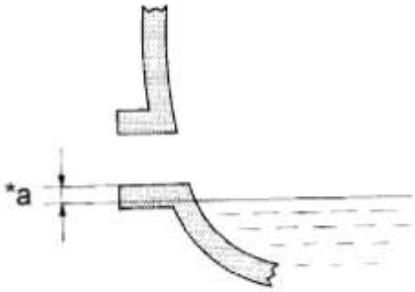

**Rear axle differentials with differential cooling**

Rear axle differentials with optional oil cooling operate with a capacity of 1.6ltr of oil. How to fill the differential with oil:

Loosen the suction pipe (dash) in front of the in-line filter and connect on the filter side an adapter hose (approx. 1 m silicone hose inside dia. 12mm and D8 fitting). Seal the pipework side during the filling with a D8 plug. Pour 1.6 ltr. of the recommended rear axle differential oil into an appropriate container and suck it into the differential using the adapter hose. To do this one person should turn on the pump of the oil circuit for long enough to completely suck up the 1.6 litres of oil. Allow the pump to run only as long as is necessary. Then quickly disassemble the adapter hose and screw the suction pipe back into the cooling circuit again.

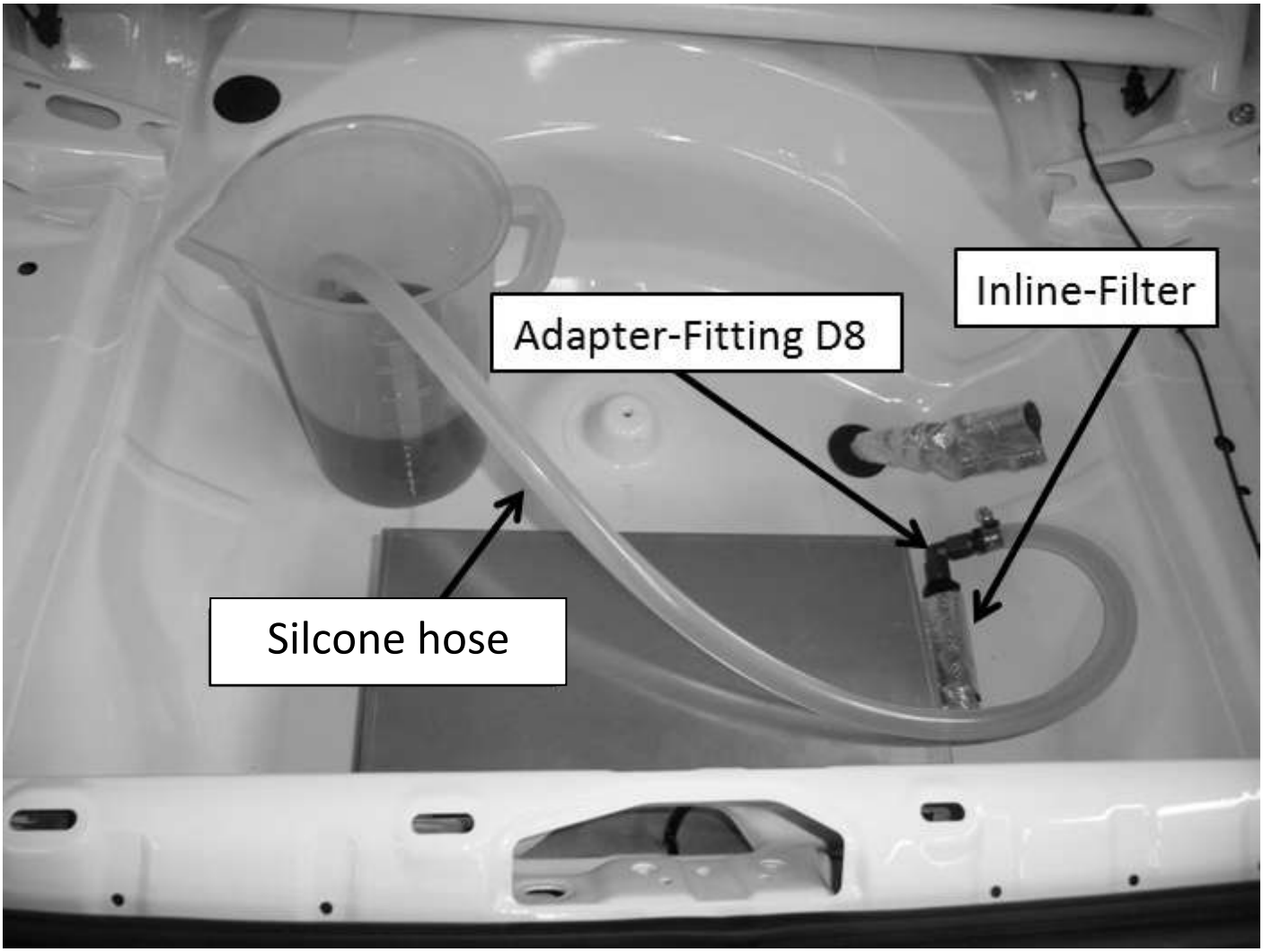

### 2.5.5 Technical data of the rear axle differential

| | | | |
|---|---|---|---|
| Transmission type | | 6MT | 6MT |
| Differential type | | FD20A (Standard) | FD20AT (Torsen) |
| Transmission type | | Hypoid gear assembly | Hypoid gear assembly |
| Differential transmission ration | | 3.727 | 4.100 |
| Driving pinion | Number of teeth | 11 | 10 |
| Internal gear | Number of teeth | 41 | 41 |
| Number of differential pinions | | 2 | 8 |
| Oil viscosity | | SAE 75W-140 | SAE 75W-140 |
| Oil type | | Elf HTX 755 | Elf HTX 755 |
| Oil capacity w/o cooling kit | ltr | 1.15…1.22 | 1.15…1.22 |
| Oil capacity with cooling kit | ltr | approx. 1.6 | approx. 1.6 |
| Weight w/o cooling kit | kg | 32.0 | 34.5 |

## 2.6 Diagram overall gearing

Graphic Overall gearing GT86 CS-V3 CUP

axle ratio i = 3.727 axle ratio i = 4.100

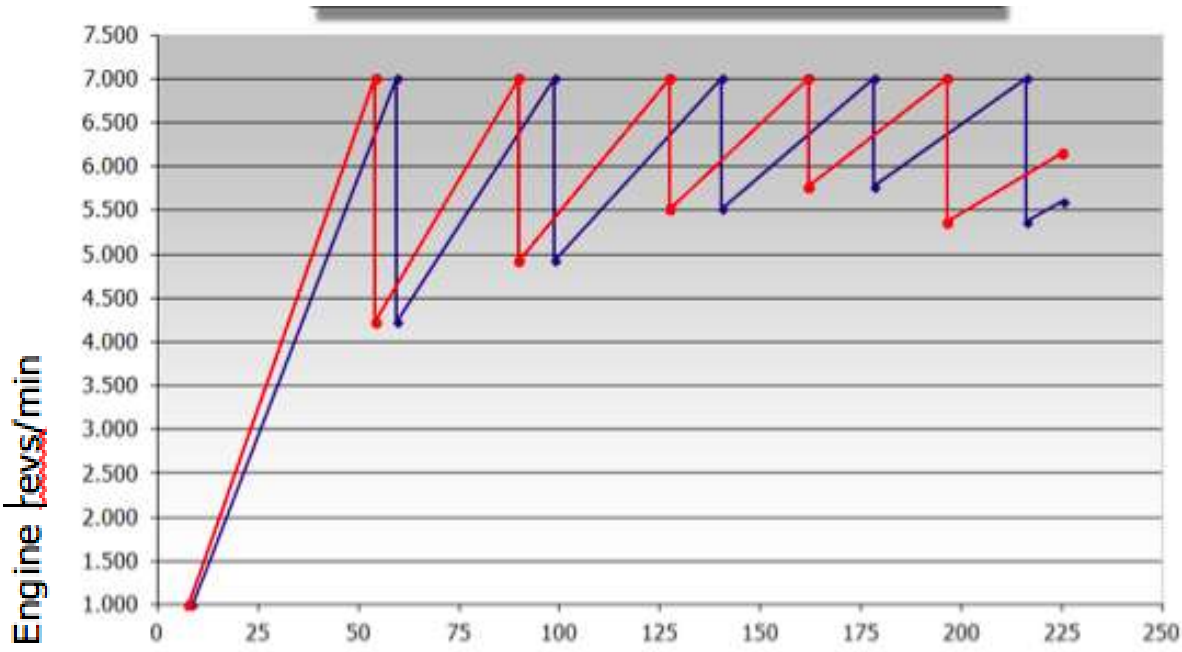


Speed in km/h

## 2.7 Wheel hubs

The standard wheel bolts and nuts have been replaced by longer and stronger versions.

**TMG Race Part** Wheel bolts M12x1.25 – TMG part no. DYX00-31023

**TMG Race Part** Wheel nuts M12x1.25 – TMG part no. DYX00-20312

# 3 Wheel suspension

## 3.1 General

On the front axle an independent suspension with MacPherson struts is used.

The rear axle is designed as an independent suspension and is fitted with double wishbones.

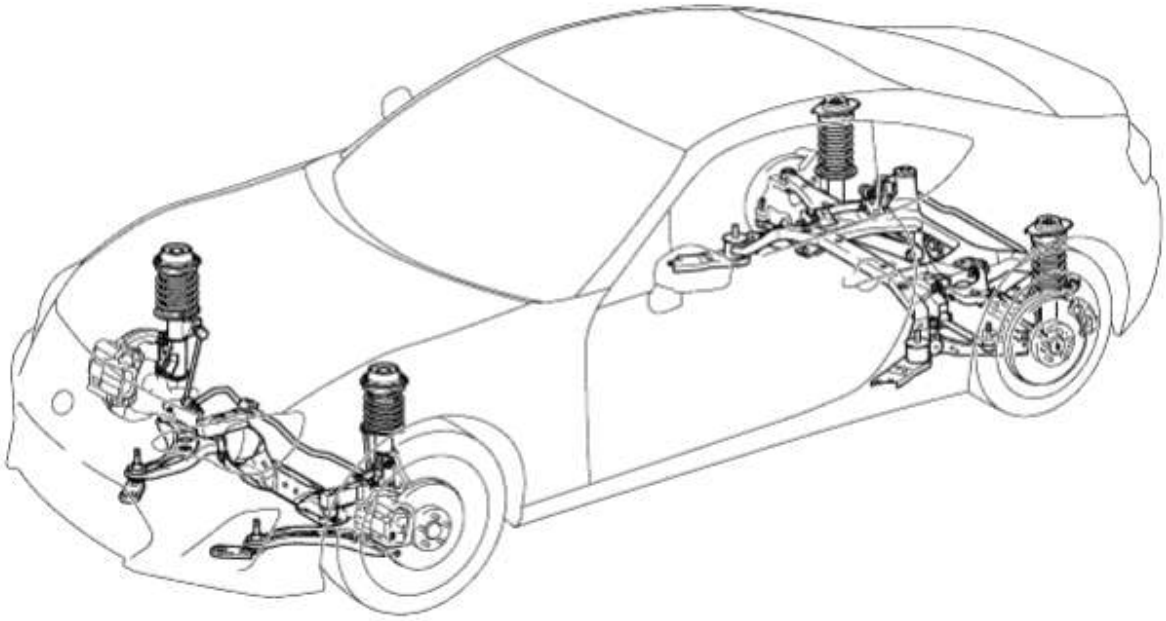

**Attention!**

All joints and rubber bearings of the front and rear axles, including the sub-frame must not be replaced or altered in any way, and must always conform to the delivery status of the vehicle.
Only in the case of wear may these parts be exchanged with Original Toyota Spare Parts, or TMG Race Parts.

Alone the rubber bushings for the front and rear stabilisers may be exchanged against the stabiliser rubber bushings kit supplied with:

| | |
|---|---|
| DYXAJ141003-00-A01 | BUSH, ANTI-ROLL-BAR, 20MM, FR, GT-86. 2014 |
| DYXAJ143003-00-A01 | BUSH, ANTI-ROLL-BAR, 16MM, RR, GT-86. 2014 |

### 3.1.1 Front and rear chassis struts

The front axle is reinforced with a strut brace

**Front axle strut brace; 2013**

**Front axle strut brace; 2014**

***The illustration shows the front strut brace as of Model 2014.**

**Attention!**

The screw fitting in the middle position of the strut should be used only for the optimal attachment of the brace to the chassis.

**Under no circumstances should the chassis be braced to generate a camber change of any kind.**

With the rear axle the rear seating of the sub-frame can be additionally reinforced by an optionally available cross member.

**Rear axle cross member**

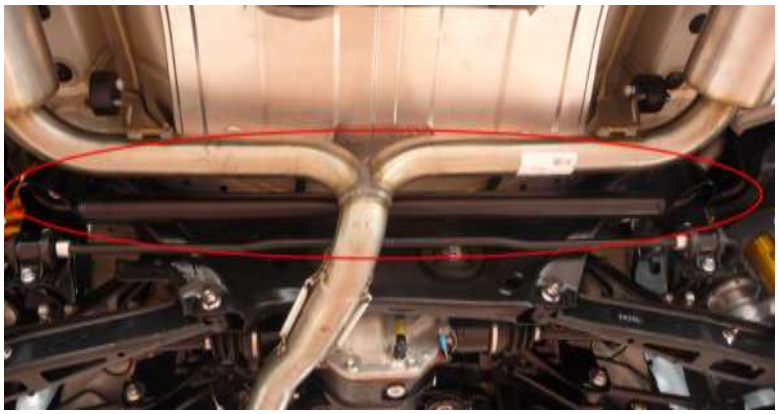

**TMG Option Part** Rear axle cross member - TMG part no. DYXAJ112002-00-01

## 3.2 Front stabiliser

A front axle stabiliser conforms to the series and has a diameter of 18.00mm (standard).

Due to the adaption of the Bilstein suspension strut the original coupling rods of the stabiliser have been replaced with a shorter version.

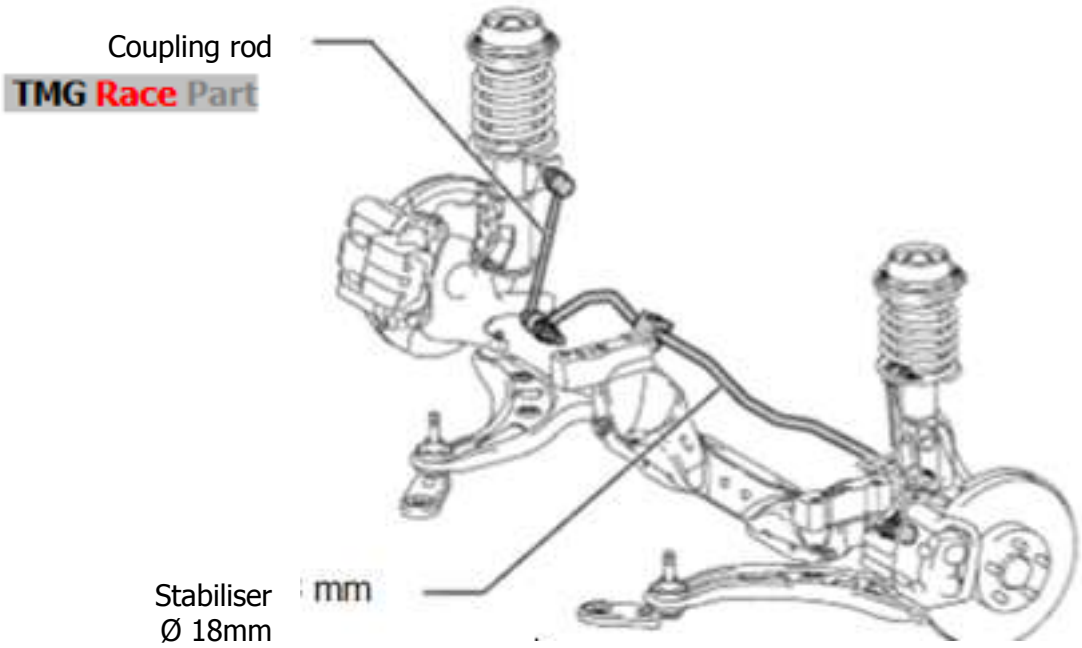


**TMG Race Part** Kopp front axle coupling rod – TMG part no. DYXAJ140021-00-A01

**TMG Option Part** Front axle stabiliser kit _20mm – TMG part no. DYXAJ141001-00-A0

All information about the standard stabiliser:

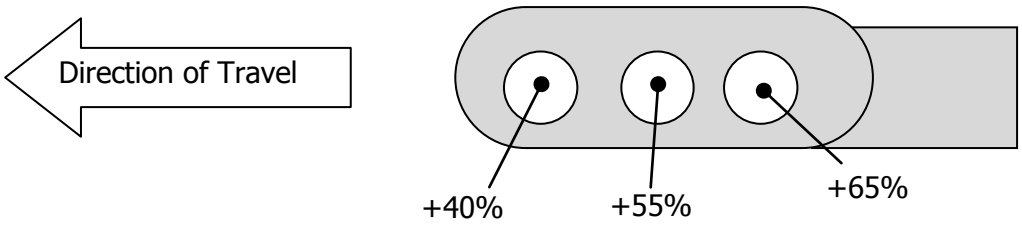


Both stabiliser variants have been approved since the 2014 season.

## 3.3 Rear stabiliser

The rear axle stabiliser has a diameter of 14.0 mm (series).

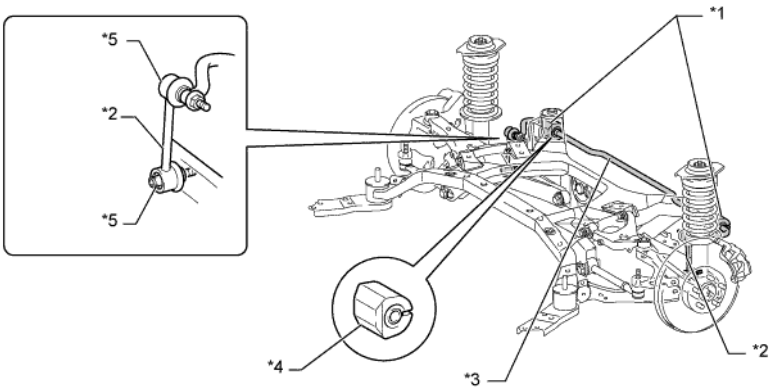


| | | | |
|---|---|---|---|
| *1 | Rear stabiliser bush | *2 | Stabiliser brace subunit |
| *3 | Rear stabiliser | *4 | Self-lubricating rubber |
| *5 | Ball joint | - | - |

The adjustable stabiliser is in the centre position approx. 65% stiffer than the standard version.

All information about the standard stabiliser:

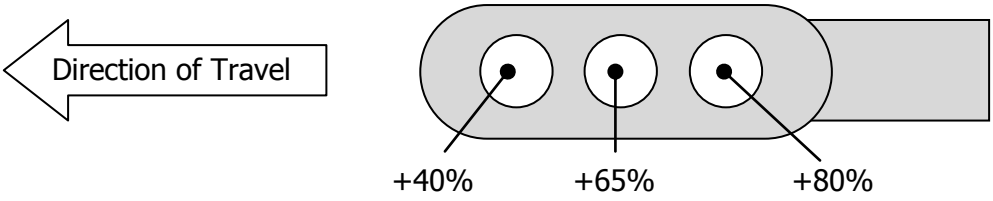


**TMG Option Part** Rear axle stabiliser kit_16mm – TMG part no. **DYXAJ143001-00-A01**

Both stabilisers have been approved since the 2014 season.

## 3.4 Shock absorbers and springs

The shock absorbers, bushings and suspension springs have been replaced with a motorsport version from the companies Bilstein and Eibach.

The front and rear shock absorbers have a 2-way adjustment and can be adjusted in bound (compression) and damping (re-bound).
The MacPherson struts of the front axle have adjustable struts and allow a camber increase to approx. -3.5° in relation to the ride height.

Front suspension strut incl. strut mounting

Rear suspension strut incl. strut mounting

Front axle:

**TMG Race Part** Front Left Bilstein Suspension strut – TMG part no. DYXAJ140031-00-A01

**TMG Race Part** Front Right Bilstein Suspension strut – TMG part no. DYXAJ140032-00-A01

Rear axle:

**TMG Race Part** Rear Left & Right Bilstein Suspension struts – TMG part no. DYXAJ142011-00-A01

### 3.4.1 Front axle suspension strut

The front MacPherson strut has separate ranges of adjustment in bound (compression) and damping (re-bound).

#### 3.4.1.1 Front axle compression and re-bound adjustment

**Damping force adjustment**

Red adjusting screw (rebound damping).
Blue adjustment screw (compression damping).

Positions: 1-soft to 10-hard.

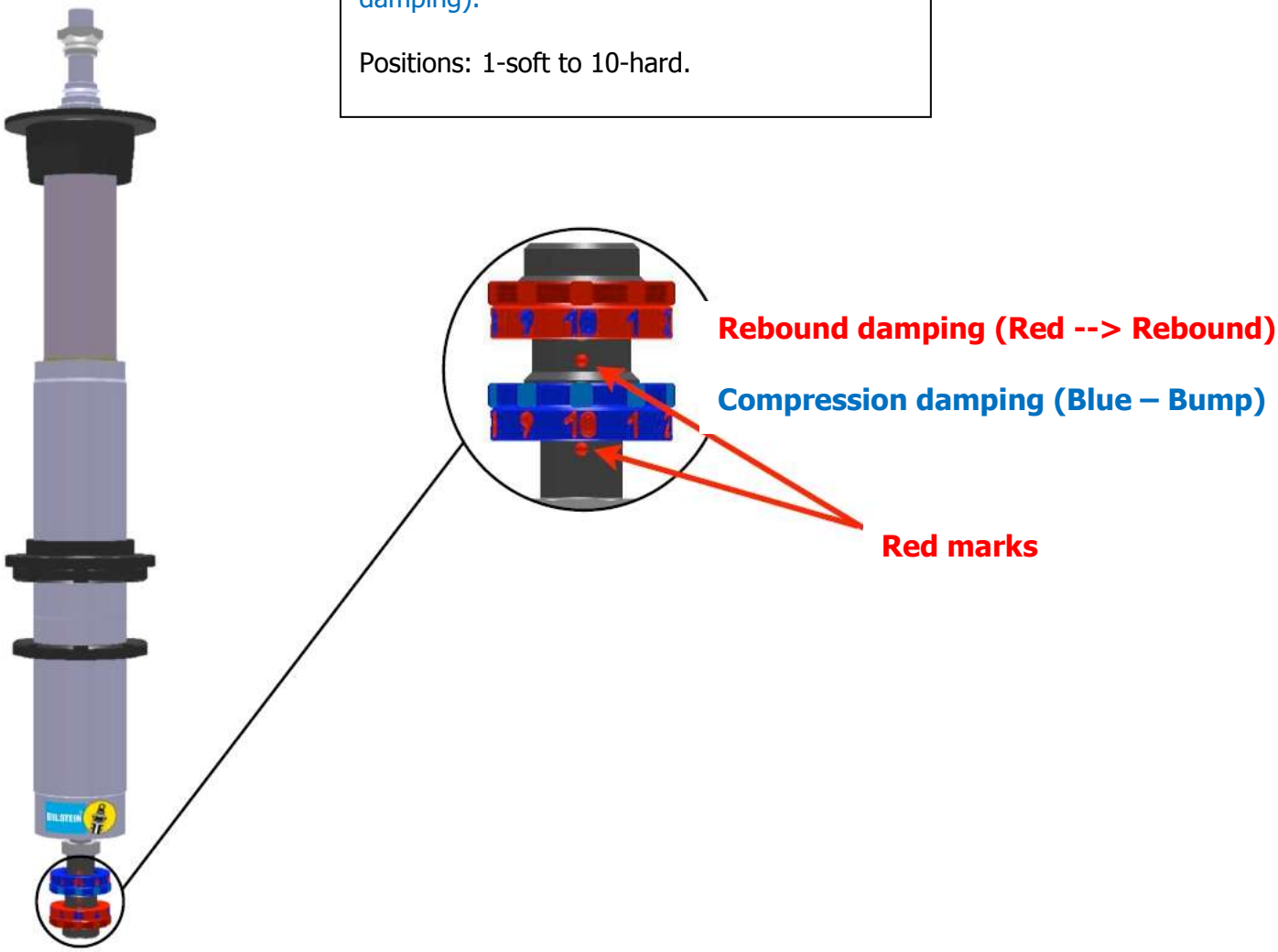

## 3.4.1.2 Assembly / disassembly front axle coil spring

### Disassembly

| | | |
|---|---|---|
| **1** | 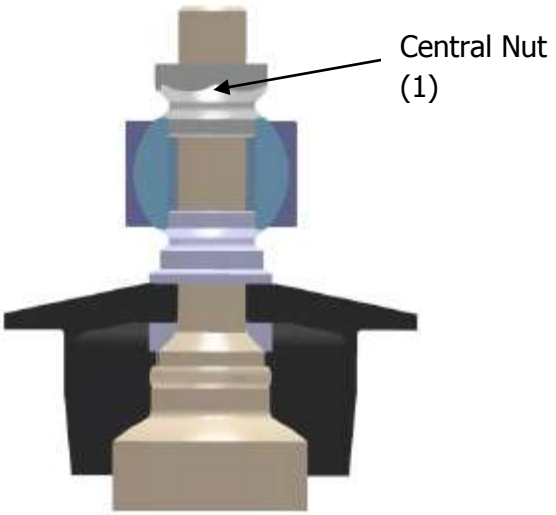 | **Loosen Central Nut 1** |
| **4** | 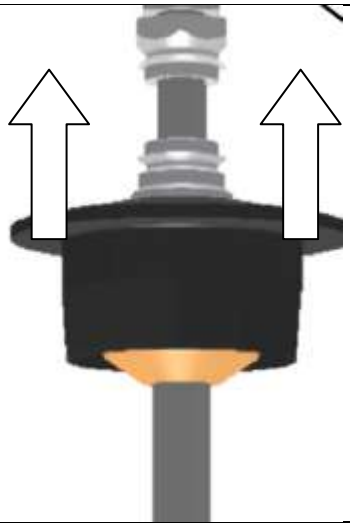 | **Remove bush, upper spring seat and main spring - auxiliary spring & plate.** |

Reassemble in reverse order.

**Central nut (1) tightening torque: 60Nm**

### 3.4.1.3 Front axle strut bearing, camber adjustment

The upper strut bearing of the front axle has a camber adjustment facility.

**Camber adjustment strut bearing left front axle with Torx screws and adjustment range**

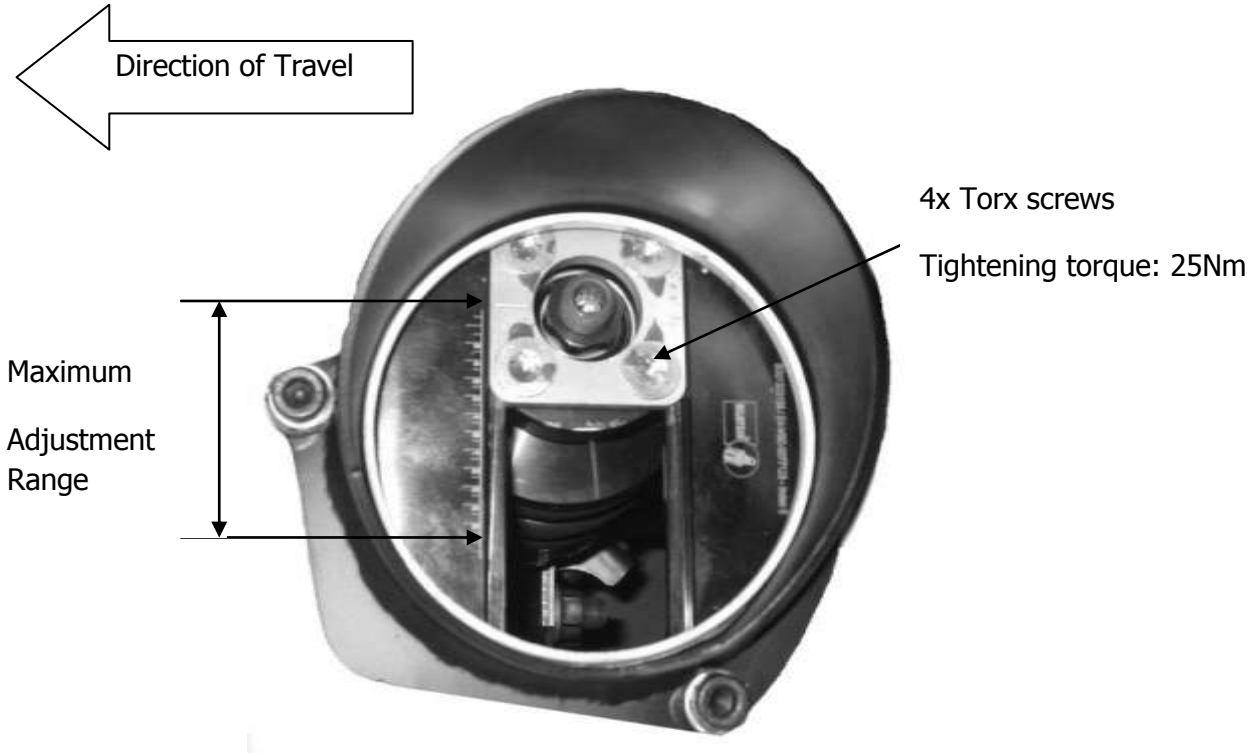


Maximum camber angle: 3.8°

When aligning the wheels the lower adjustment plate can be moved to the left and right (in the direction of travel) after the four Torx screw have been loosened. This is how the angle of camber is altered.

After correcting the camber the screws must be tightened with a torque of **25Nm** (10.9)

**Attention!**

Under no circumstances should any screw be left out, have the thread extended or the strut bearing and its securing be worked on in any way in order to, for example, obtain a camber other than the specified values.

### 3.4.2 Rear axle shock absorber

In the interior of the vehicle there is an adjusting screw at the top end of the rear shock absorber to adjust the compression and rebound damping.

Compression and rebound damping provisions each have an adjustment range of 10 clicks, stop to stop.

#### 3.4.2.1 Rear axle rebound and compression level adjustment

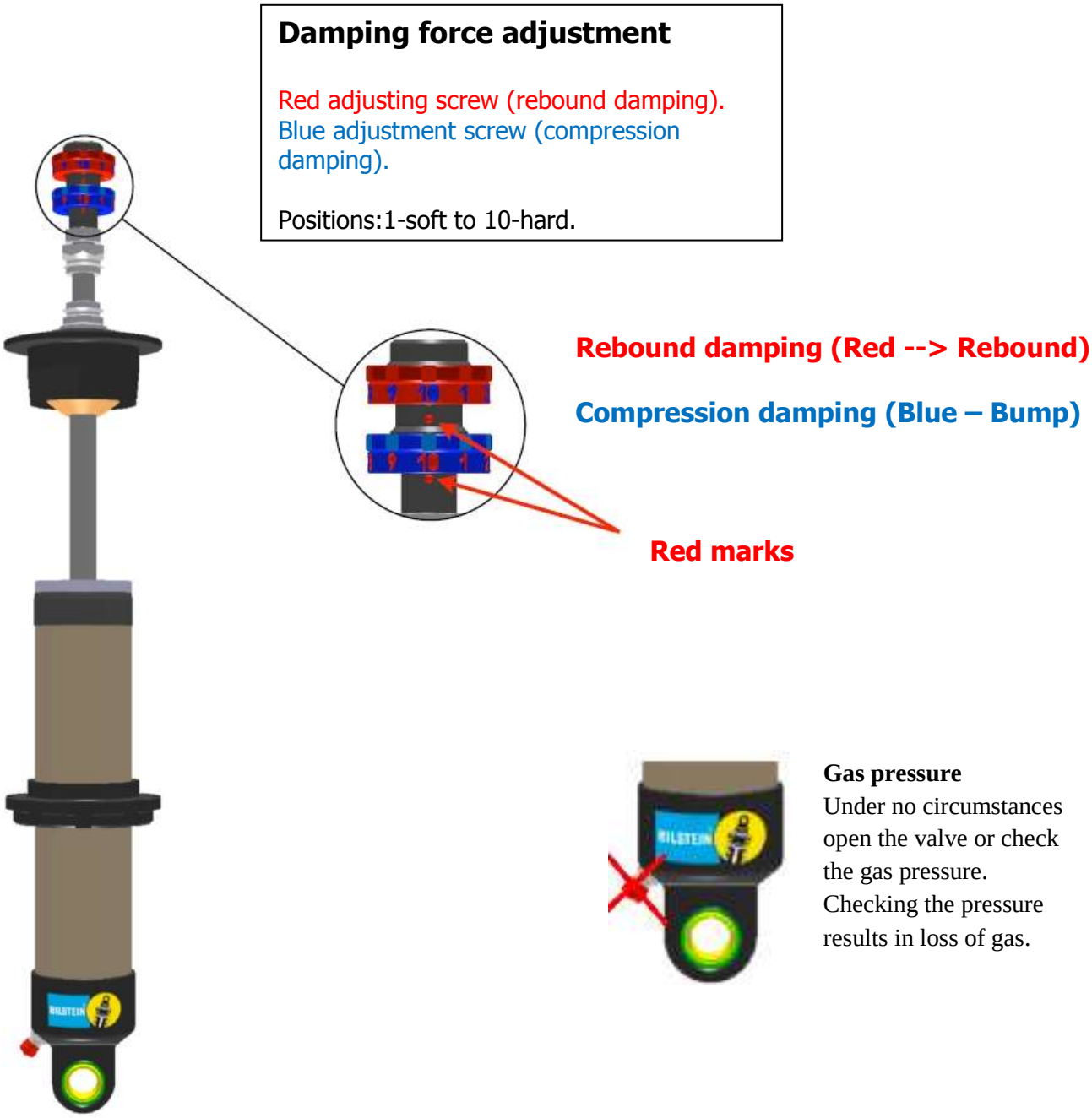


**Gas pressure**
Under no circumstances open the valve or check the gas pressure. Checking the pressure results in loss of gas.

## 3.4.2.2 Assembly / disassembly rear axle suspension springs

### Disassembly

| | | |
|---|---|---|
| 1 | 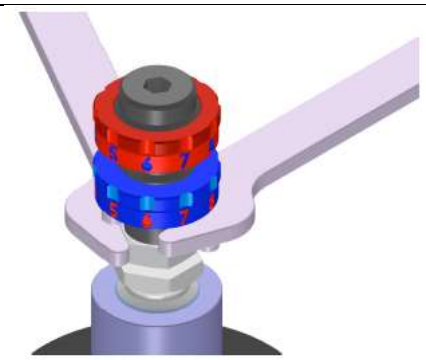 | **Loosen screw 1** |
| 2 |  | **Keep all parts together and assigned to respective dampers.** |
| 3 | 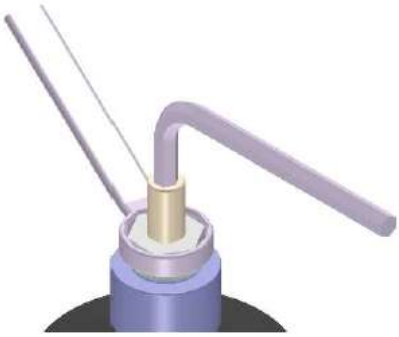 | **Loosen screw 2** |
| 4 | 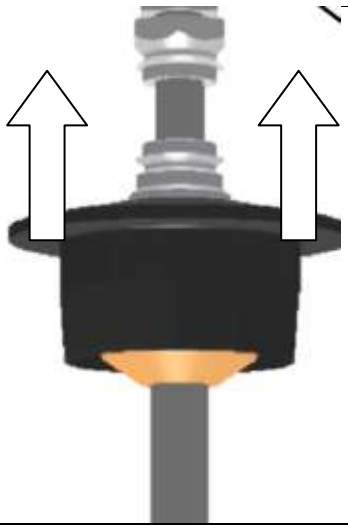 | **Remove the spring plate and main auxiliary spring.** |

## Assembly

| | | |
|---|---|---|
| 1 | 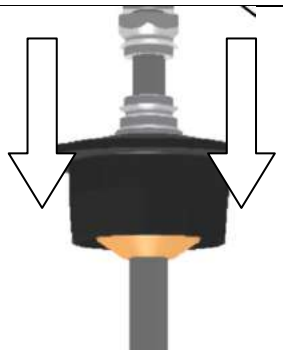 | **After inserting the main and auxiliary spring fix the spring plate back onto the piston rod.** |
| 2 | 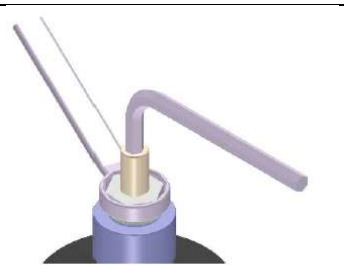 | **Tighten screw with 45 Nm.** |
| 3 |  | **Screw the nut by hand to the stop** |
| 4 | 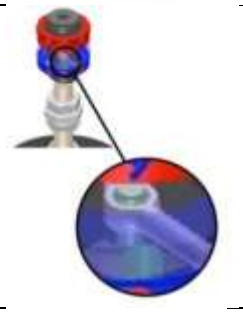 | **Put the adjusting rod into the cross pin hole.** |
| |  | **Turn adjuster by hand to the stop** |
| | 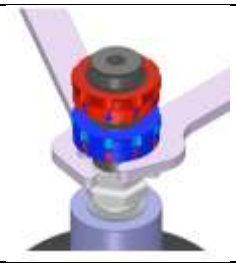 | **Tight the lock nut with 25 Nm** |

**Attention!**
The camber of the rear axle is not adjustable. According to the GT86 workshop manual, the rear axle has the following camber angle: **-1° 12'** +/- 45' (with reference to the standard ride height).
Modifications for altering the camber angle are forbidden!

### 3.4.3 Suspension springs and ride height adjustment

The front and rear axle linear main springs are fitted with an auxiliary spring. For the exact specification please refer to the Setup Sheet.
The ride height can be influenced by the adjustment of the lower spring plate. For the front and rear axles two hook spanners are needed (see tool section).

After the adjustment the two nuts must be contra tightened.

### 3.4.4 Spring plate height

For the simple specification and reproduction of the ride height (ride height Rh), a spring plate height for the front and rear axles is defined, which, for example, is entered on the Setup Sheet.

The reference measurements for the front and rear axles are defined as follows:

**Front axle**

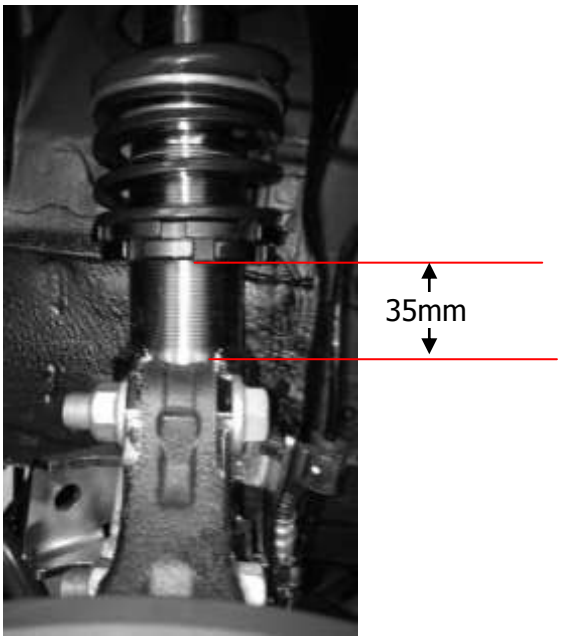


**Rear axle**

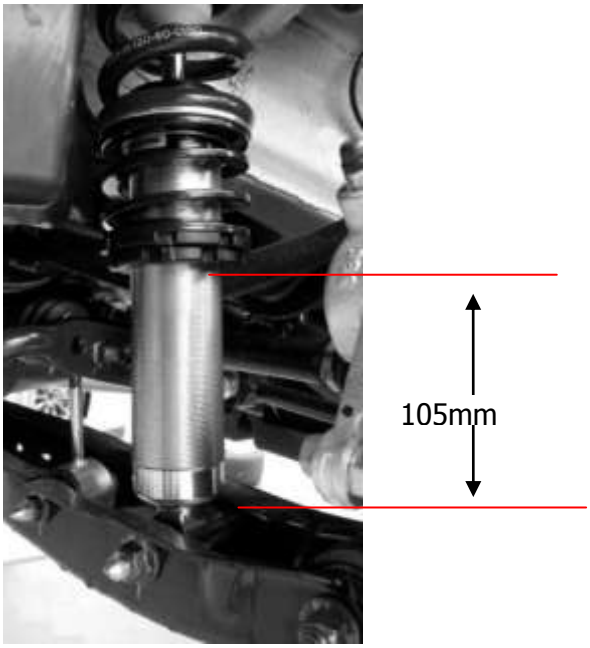

**Attention!**

* Spring and lock nut must always be used!

In the delivery status the spring plate heights are as follows:

**Front axle approx. 35 mm**

**Rear axle approx. 105 mm**

* what is measured is the free screw thread length on the suspension strut

## 3.4.5 Ride height

For easy checking of the ride height from the outside is by measuring the distance between the bottom edge of the wheel rim and the bottom of the wheel arch. Each participant may choose his own ride height and how he measures it.

The ride height in delivery status as specified in the Setup Sheet serves as the basis and is determined as follows:

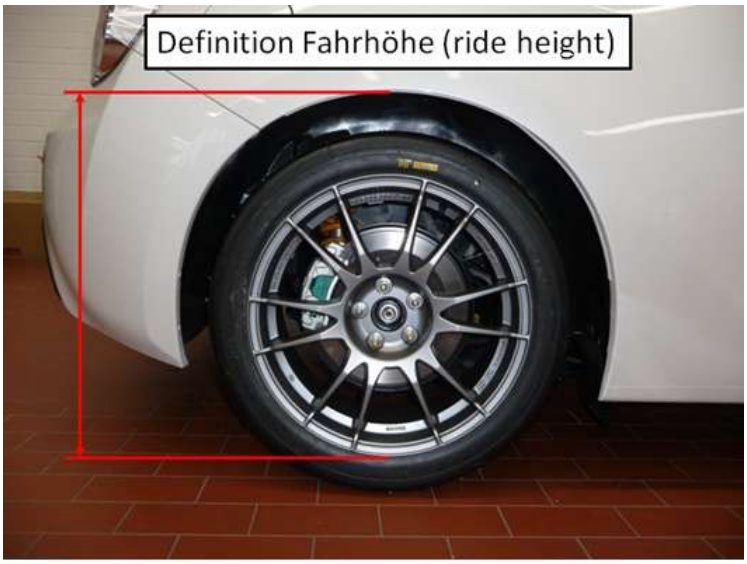


Delivery status:

Front: 567 mm

Rear: 556 mm

**Basically, the setting of the ride height is optional. However, no mechanical changes to the running gear or chassis may be made to influence the ride height. In addition all parts such as spring plates, locking nuts, bump stops etc must be fitted at all times and comply with the factory settings.**

**See also section 2.3, Drive Shafts**

## 3.4.6 Basis set-up – damping - GT86 CS-V3

The setting values (clicks) of the basic setup are as follows:

Delivery status:

| | Front axle | | Rear axle | |
|---|---|---|---|---|
| | Compression | Rebound | Compression | Rebound |
| Delivered | 5 | 5 | 5 | 5 |

Recommended settings:

| | Front axle | | Rear axle | |
|---|---|---|---|---|
| | Compression | Rebound | Compression | Rebound |
| Dry | 5…7 | 5…7 | 5…7 | 5…7 |
| Moist | 5…7 | 4…6 | 4…6 | 4…6 |
| Wet | 4…6 | 3…5 | 3…5 | 3…5 |

## 3.4.6 Basis set-up – springs - GT86 CS-V3

Delivery status:

| Length/diameter /thickness | Front axle | | Rear axle | |
|---|---|---|---|---|
| | Main spring | Auxiliary spring | Main spring | Auxiliary |
| | DYXAJ140040-00-A01 | DYXAJ140040-00-A01 | DYXAJ140036-00-A01 | DYXAJ140040-00-A01 |
| **Delivery status** | **120/60/140** | **40/60/30** | **120/60/180** | **40/60/30** |

Example spring characteristic:

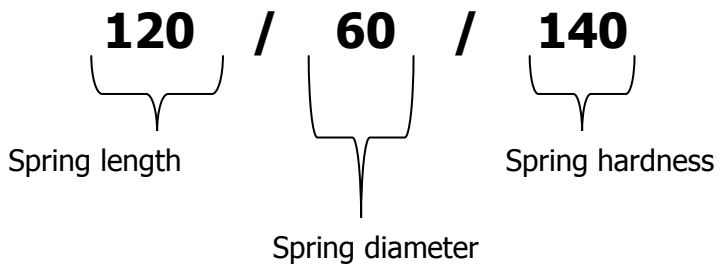

### 3.4.6 Optional set-up – springs - GT86 CS-V3

For the GT86 CS-V3 an additional main spring is available:

**TMG Option Part:** Main spring DYXAJ140035-00-A01

Length/diameter/thickness: **120/60/160**

Main springs may be exchanged. Thus, the following spring combinations result:

| | Front axle | Rear axle |
|---|---|---|
| | Length/diameter/thickness | Length/diameter/thickness |
| Variant 1 | **120/60/140** | **120/60/140** |
| Variant 2 | **120/60/140** | **120/60/160** |
| **Delivered** | **120/60/140** | **120/60/180** |
| Variant 4 | **120/60/160** | **120/60/140** |
| Variant 5 | **120/60/160** | **120/60/160** |
| Variant 6 | **120/60/160** | **120/60/180** |
| Variant 7 | **120/60/180** | **120/60/140** |
| Variant 8 | **120/60/180** | **120/60/160** |
| Variant 9 | **120/60/180** | **120/60/180** |

### 3.4.7 Maintenance of the running gear

Overhauls and maintenance must be carried out exclusively by the company Bilstein.

During race weekends the Bilstein Service truck is also available.

For opening times and service hours please refer to the local notice board.

## 3.5 Wheel rims

Wheel rims with the following dimensions have been fitted:

**TMG Race Part** Wheel rim OZ 8x17 – DYXAJ140017-00-A01

The following wheel nuts must be fitted (see section: wheel hubs)

**TMG Race Part** Wheel nuts M12x1.25 – TMG part no. DYX00-20312

The following track extenders may be used (4 pieces per vehicle):

**TMG Race Part** Distance Plate, Wheel, 10MM– TMG part no. DYXAJ140028-00-A01

Overall track widening: 20mm per axle

* Illustration may differ

## 3.6 Tyres

Only tyres from tyre partner Pirelli in the following sizes and mixtures are allowed:

Dry: **PIRELLI 245/620-17 DH (Slick)**
Wet: **PIRELLI 245/620-17 WH (Rain)**

| Condition | Tyre type | Dimension | Identification | Optimum tread temperature (operational range) |
|---|---|---|---|---|
| Dry | Slick | 245/620-17 | DH | 80° … 105°C |
| Wet | Rain | 245/620-17 | WS | --- |

**Attention!**

Any mechanical or chemical treatment of the tyres is prohibited!

# 4 Power transmission

## 4.1 Brake control and driving dynamics

As standard the following brake control functions are available:

- ABS (Anti-lock brake system)
- EBD (Electronic brake force distribution)
- Braking assistant, TRC (Toyota traction control system)
- VSC (vehicle stability control)

A VSC OFF switch (driver program selection switch) is fitted.

A VSC SPORT switch (driver program selection switch) is fitted.

**Braking system arrangement**

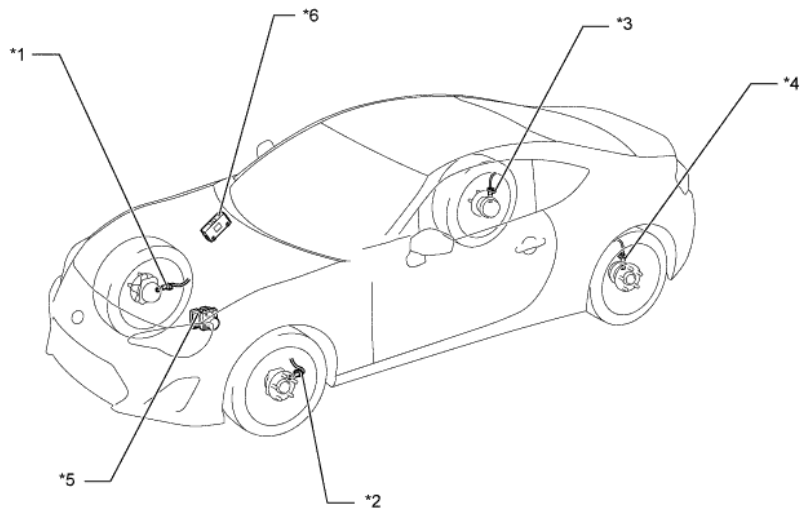


| | | | |
|---|---|---|---|
| *1 | Front wheel revolution sensor - right | *2 | Front wheel revolution sensor - left |
| *3 | Rear wheel revolution sensor - right | *4 | Rear wheel revolution sensor - left |
| *5 | Braking power regulator | *6 | ECM |

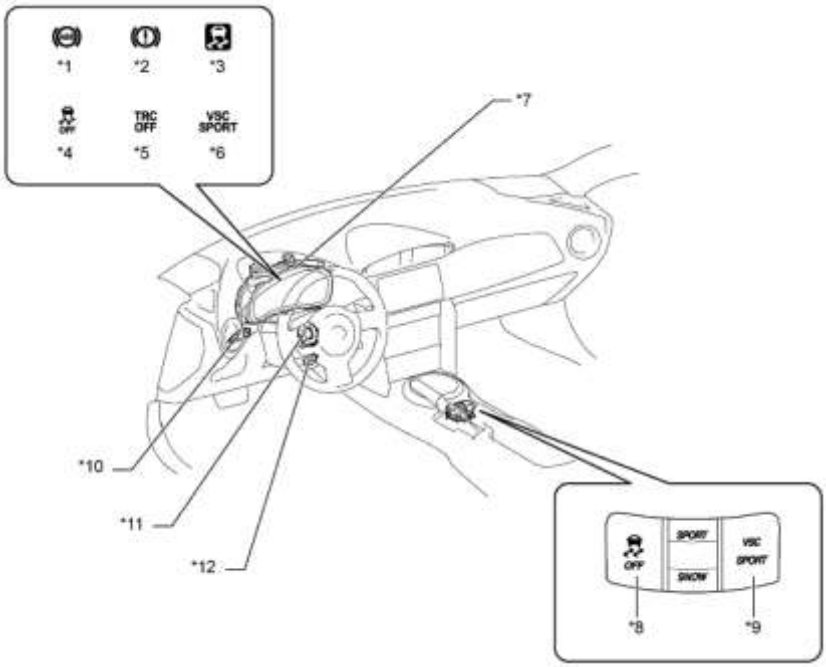


| | | | |
|---|---|---|---|
| *1 | ABS warning lamp | *2 | Braking system warning lamp |
| *3 | SLIP indicator lamp | *4 | VSC OFF control lamp |
| *5 | TRC OFF indicator lamp | *6 | VSC SPORT control lamp |
| *7 | Combination instrument assembly | *8 | VSC OFF switch (driver program selector switch) |
| *9 | VSC SPORT switch (driver program selector switch) | *10 | Brake light switch |
| *5 | Steering sensor | *12 | DLC3 |

**Attention!**

- If the VSC OFF switch (driver program selector) is pressed for approx. three seconds, VSC and TRC are turned off and the VSC OFF and the TRC OFF indicator lamps will light up.
- If the vehicle exceeds approx. 50 km/h in the TRC OFF mode TRC will turn on automatically and the TRC OFF lamp goes out.

**Function of VSC OFF switch (driver program selector)**

The operation of the VSC and TRC functions can be disabled with the VSC OFF switch (driver program selector). While the vehicle is driven on the curb or a gravel road, the engine output control is turned off to maintain the driving torque.

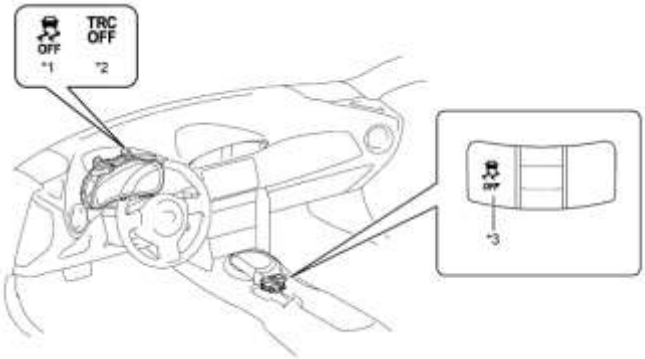


| | | | |
|---|---|---|---|
| *1 | VSC OFF control lamp | *2 | TRC OFF indicator lamp |
| *3 | VSC OFF switch (driver program selector) | - | - |

3 modes can be selected with the VSC OFF switch (driver program selector) (normal mode, TRC OFF mode and VSC OFF mode).

A quick press of the VSC OFF switch (driver program selector) in normal mode will select the TRC OFF mode.

If the VSC OFF switch is pressed for at least three seconds the VSC and the TRC functions are switched off.

With a quick press of the VSC OFF switch (driver program selector) in the TRC OFF mode or VSC OFF mode, or by switching the ignition off, the normal mode is selected.

**Functions of the VSC SPORT switch (driver program selector)**

Pressing the VSC SPORT switch (driver program selector) causes the skid control computer to switch the VSC control between normal mode and SPORT mode.

Press the VSC SPORT switch (driver program selector) to switch the VSC to the SPORT modus. Now the VSC SPORT control lamp and the VSC control lamp will light up in the combination instrument display to inform the driver that the vehicle is in the VSC SPORT mode.

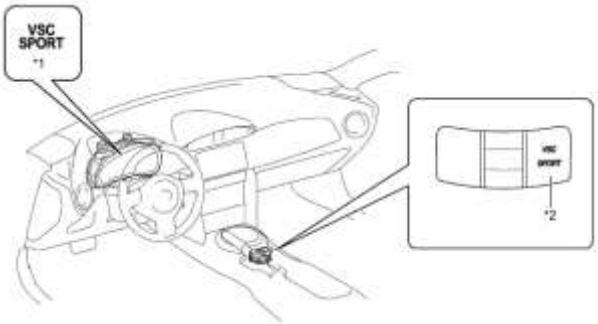


| | | | |
|---|---|---|---|
| *1 | VSC SPORT control lamp | *2 | VSC SPORT switch (driver program selector switch) |

**Structure of the brake pressure regulation unit**

The braking power control unit consists of the braking power regulator part and the skid control ECU.

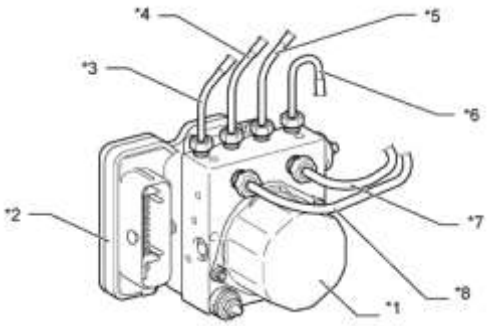


| | | | |
|---|---|---|---|
| *1 | Braking power regulating unit | *2 | Anti lock ECU |
| *3 | R/H rear brake pipe | *4 | L/H front brake pipe |
| *5 | R/H front brake pipe | *6 | L/H rear brake pipe |
| *7 | Main cylinder pipe (primary side) | *8 | Main cylinder pipe (secondary side) |

**Functioning of the brake servo**

In emergency braking, the skid control ECU detects the intention of the driver based on the speed of the pressure increase in the master cylinder based on the master cylinder pressure sensor signal. If the anti-lock ECU judges the need for additional braking assistance, pressure is generated by the pump in the braking power controller and passed on to the wheel brake cylinder in order to exert greater fluid pressure.

Fail safe

If an error occurs in the skid control ECU, the sensors or in the braking power regulating unit the system will continue to regulate the braking control, to the exclusion of the fault, in the normal operating range.

Diagnosis

When the skid control ECU detects a malfunction in the braking control system either the warning lamp or the indicator lamp will light up. Simultaneously a diagnostic fault is recorded in the memory of the skid control unit.

This system has a sensor signal test function (test mode).

For more information on DTCs and check functions, see the workshop manual.

**Attention!**

It is specifically pointed out that the vehicle comes with a standard ABS braking system. Any alteration or modification is specifically forbidden!

## 4.2 Braking system

**Overview**

A piston-style master cylinder subunit and a simple version of the braking booster are fitted.

**Technical data**

| | | |
|---|---|---|
| Main braking cylinder subunit | Type | Tandem (plunge piston) |
| | Diameter | 25.4 mm (1.0 in.) |
| | Manufacturer | HITACHI |
| Braking power booster unit | Type | Simple |
| | Size | 10.5 in. |
| | Manufacturer | HITACHI |

### 4.2.1 Running-in instruction for new brake pads

**Running-in on the race track:**

1. Make sure that the brake pads are installed correctly and check the pedal pressure before starting off.
2. In the first two laps use the brakes gently with a maximum of half the brake pressure. Instead use the brakes twice as often as you normally would on the route, for example, on a stretch between two corners. This ensures that the brake pads get a good contact with the discs.
3. Increase your speed and braking pressure during the next two laps to get a more constant temperature in the brakes until you are at about 80-90% of your race speed.
4. Let the brakes now cool down at a moderate speed with minimal braking and drive back to the pits. Let the brakes now cool to ambient temperature. Your brakes should now be ready for immediate racing use.

**Running-in outside of the race track:**

1. Make sure that the brake pads are installed correctly and check the pedal pressure before starting off.
2. Drive to somewhere where there is no traffic.
3. Brake the vehicle 15-20 times from 80 down to 10km/h.
   **Important!** Make sure you do not come to a complete stop!
4. Now drive for approximately five minute with minimal braking to let the brakes cool down.
5. Now brake 15-50 times from 100 down to 10 km/h.
   **Important!** Make sure you do not come to a complete stop!
6. Now drive for another 15 minutes with minimal braking to cool the brakes.
7. Stop the car and turn off the engine and let the brakes cool to ambient temperature.

**Note:**

After every running-in routine check the braking system and the brake discs. Make sure that the brake pads have complete contact with the brake discs and that there are no traces of glazing visible on the disc. If in doubt, repeat the running-in routine

## 4.3 Front brakes

The vehicle is delivered with the following motorsport brake pads:

**Performance Friction 08**

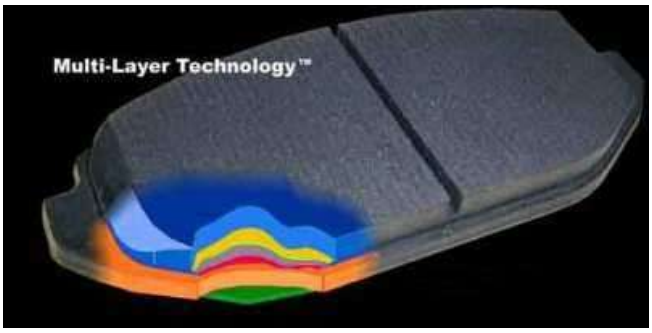


| | |
|---|---|
| Material | Carbon-metallic |
| Mixture | 08 |
| Thickness | 18mm incl. mounting plate |
| Set | Comprises 4 pads |

* Illustration not binding

**TMG Race Part** Front axle brake pads – TMG part no. DYX00-25014

Ventilated disc brakes are fitted on the front axles.

| | |
|---|---|
| Calliper type | Floating calliper |
| Brake calliper piston diameter | 2x Ø42.8 mm |
| Disc (diameter x thickness) | 294.0 mm x 24.0 mm ventilated |

## 4.4 Rear brakes

The vehicle is delivered with the following motorsport brake pads:

**Performance Friction 08**

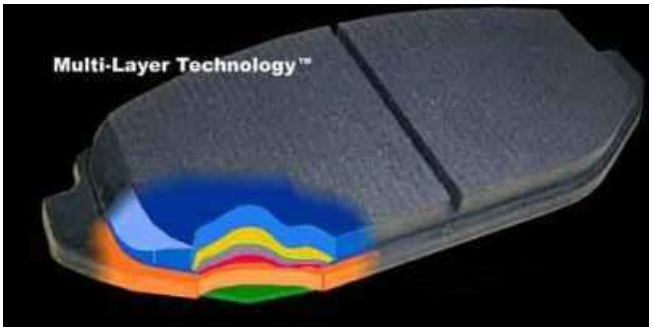


| | |
|---|---|
| Material | Carbon-metallic |
| Mixture | 08 |
| Thickness | 16mm incl. mounting plate |
| Set | Comprises 4 pads |

*Illustration not binding

**TMG Race Part** Rear axle brake pads – TMG part no. DYX00-25019

Non-vented disc brakes are fitted on the rear axle.

| | |
|---|---|
| Calliper Type | Floating calliper |
| Wheel cylinder diameter | 1x Ø 40.4 mm |
| Disc (diameter x thickness) | 286.0 mm x 10.0 mm non-vented |

## 4.5 Brake pipework

The brake pipework between the body and calliper, front and rear, has been replaced with a stainless steel-jacketed heavy-duty hose.

**Installed brake pipework: front axle**

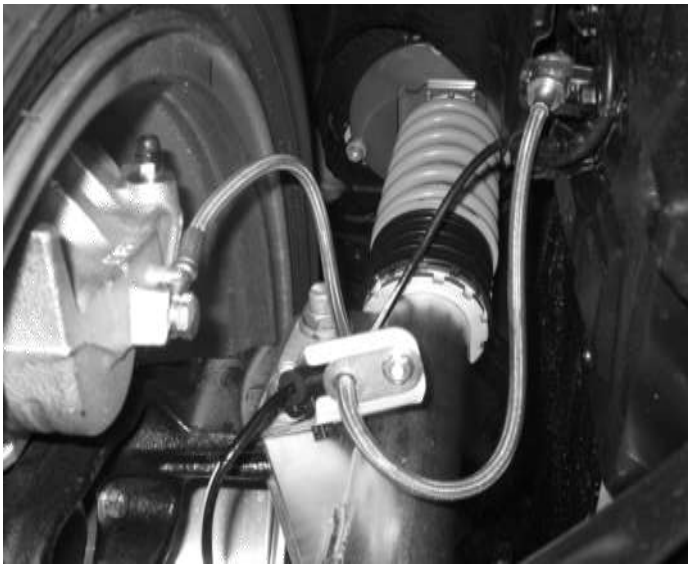

**TMG Race Part** Brake pipe front left – TMG part no. DYXAJ170011-00-A01

**TMG Race Part** Brake pipe front right – TMG part no. DYXAJ170012-00-A01

**Installed pipework: rear axle**

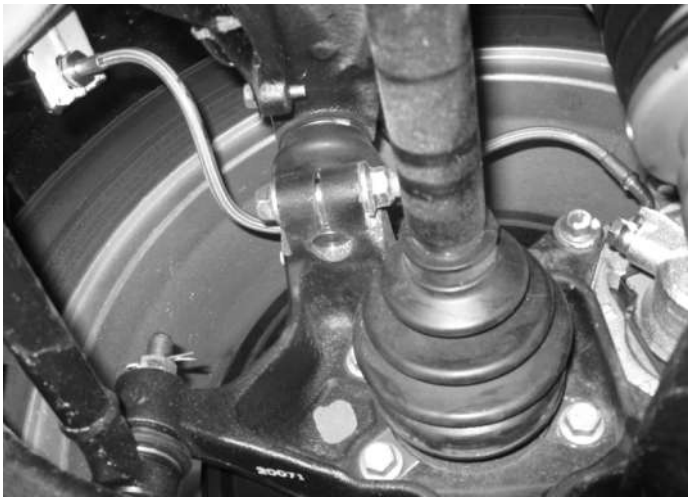

**TMG Race Part** Brake pipe rear left – TMG part no. DYXAJ171007-00-A01

## 4.6 Brake fluid

The vehicles are delivered with AP Racing brake fluid.

**Basically, you are free to choose the brake fluid used in the GT86 CUP.**

**AP Racing PRF660**


**Note!**
AP Racing PRF660 corresponds to DOT4 (glycol-based) and should not be mixed with DOT5 (silicone-based).

## 4.7 Brake cooling

The front callipers have a cooling air-duct adapter system integrated into the front section. For this the fog light covers were replaced with funnel collectors and an opening was made in the wheel arch at the level of the brake callipers.

**Specification 2013**

**Individual parts (w/o mounting material)**

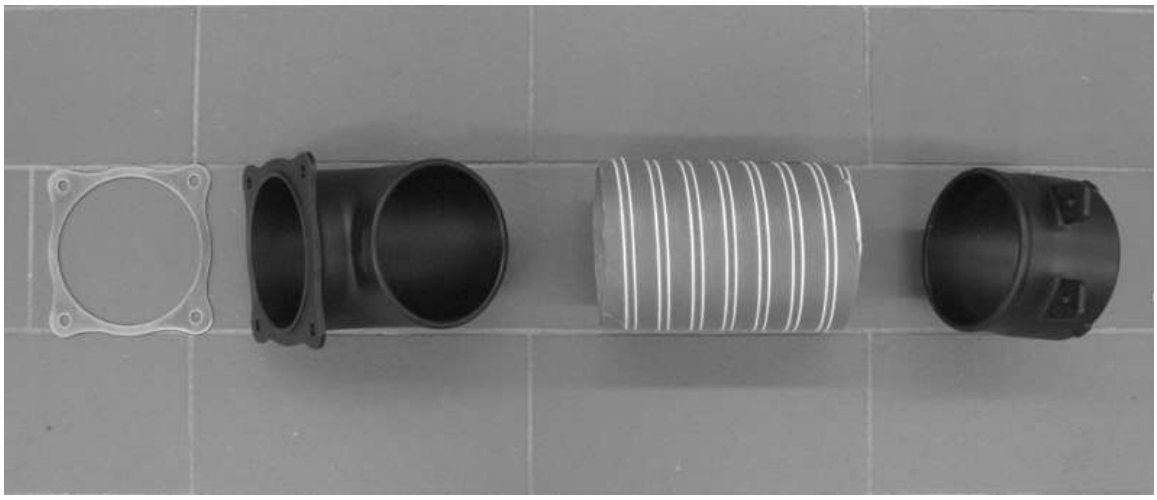

**Cooling air intakes in the bumper**

**Cooling air outlets in the wheel arch housing trim**

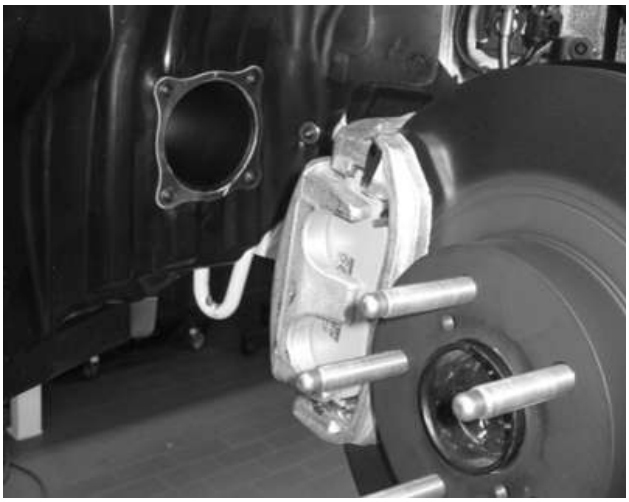

**TMG Race Part** Kit Brake cooling – TMG part no. DYXAJ195017-00-A01

**Specification 2014**

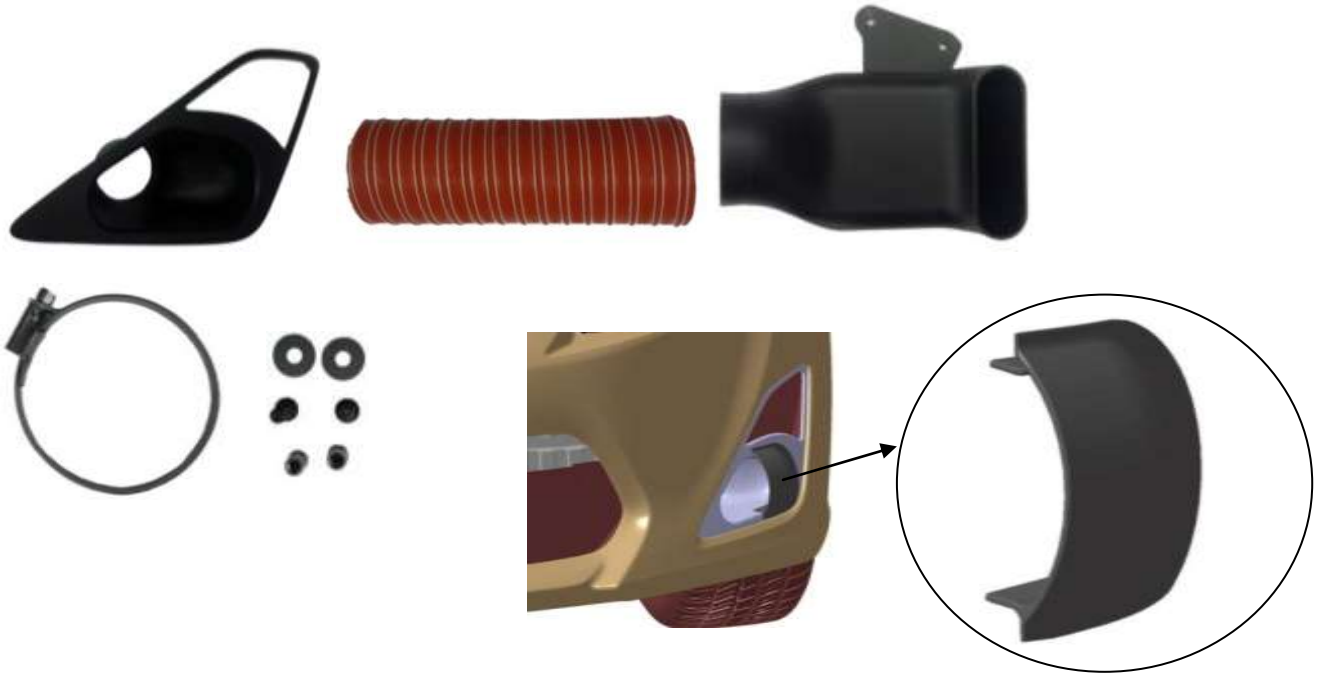

**TMG Race Part: Kit, Brake cooling front left:** DYXAJ172007-00-A01

**TMG Race Part: Kit, Brake cooling front right:** DYXAJ172008-00-A01

# 5 Steering

## 5.1 Power steering system EPS

**Overview**

An EPS system (Electric Power Steering) with speed detection is fitted.

This system uses a power steering motor and a gear reduction, which are installed in the steering column assembly, in order to generate steering assisted torque, and reduce the driver's effort while steering.

**Technical data**

| | | |
|---|---|---|
| Power steering type | | Electric Power Steering (EPS) |
| Steering gear type | | Rack and pinion |
| Rack range | mm | 149 |
| Number of turns, lock to lock | | 2.48 |
| Steering gear ratio (total) | | 13.1 |

**Arrangement**

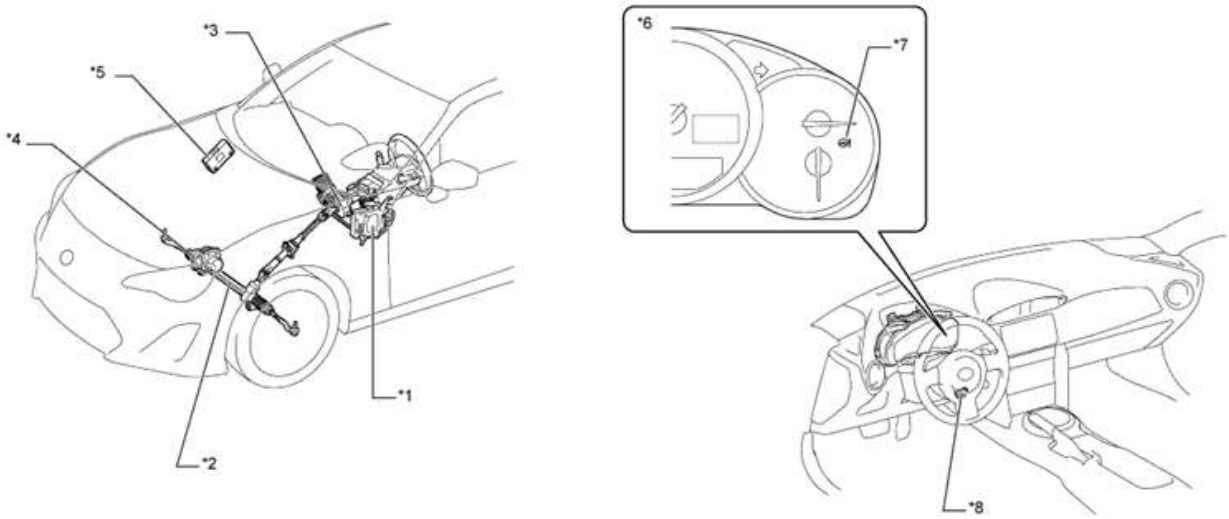


| | | | |
|---|---|---|---|
| *1 | Servo steering ECU unit | *2 | Servo steering rack unit |
| *3 | Steering column<br>- power steering motor<br>-torque sensor<br>- turning angle sensor | *4 | Braking power regulating unit<br>- Anti-locker ECU |
| *5 | ECM | *6 | Combination instrument assembly |
| *7 | EPS warning lamp | * | DCL3 |

## 5.2 Steering column

The steering column is fitted with a tilt and length adjustment mechanism and can be adapted to specific drivers.

The inclination range is 30 mm.

The telescopic range is 40 mm.

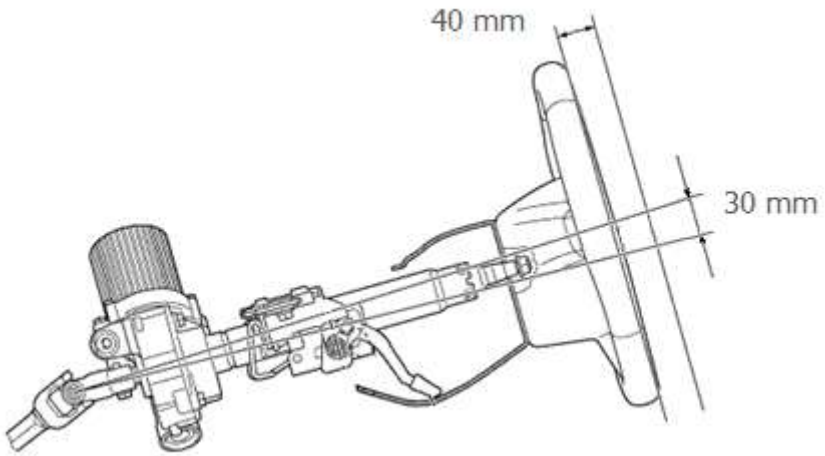

## 5.3 Steering wheel

An OMP steering wheel with suede leather (diameter 320 mm) and a special steering wheel hub is fitted. One of the two buttons in the centre of the steering wheel is already wired and configured as follows:

Left: Not used (freely available)

Right: RADIO talk button. Is used in conjunction with the optional wiring loom * as PPT (Press To Talk) button to communicate with the pit by radio.

**TMG Option Part** Harness radio – TMG part no. DYXAJ302007-00-A01

**Steering wheel**

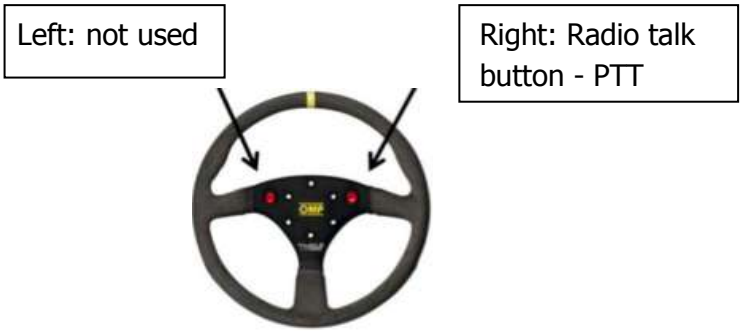


**TMG Race Part** Steering wheel – TMG part no. DYX00-670028

**Basically, the button assignment is freely available in the GT86 CUP**

**Steering wheel hub**

**TMG Race Part** Steering wheel hub – TMG part no. DYXAJ145001-00-A01

**The use of steering wheel adapters from the company OMP to extend the hub is freely available at your own responsibility. Only screws with a minimum quality of 10.9 may be used for fixing these.**

**Extensions from TMG are currently not available.**

## 5.4 Steering stops

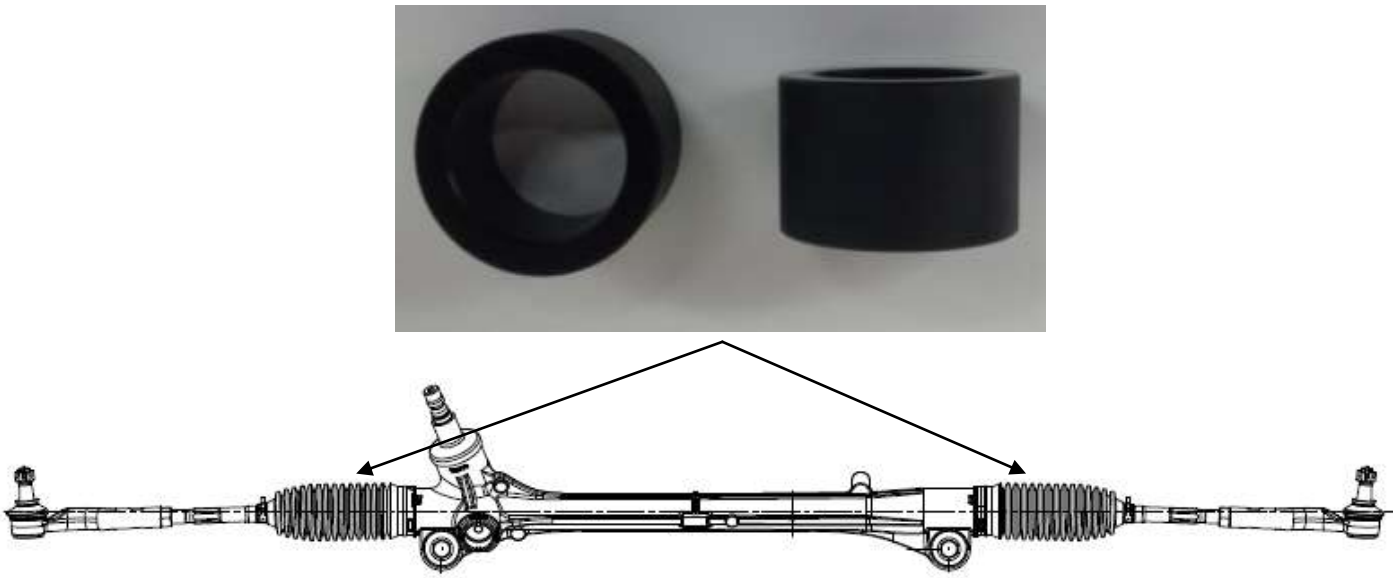

From the 2014 model on, steering stops have been installed in the GT86 CS-V3. These are also suitable for models from previous years.

The steering stops are mounted directly on the steering rod, under the dust cover. First of all the dust covers must be removed, and the steering rod dismantled.

The steering angle of the wheel is limited to about 25°.

# 6 Electric power supply / Network

## 6.1 Circuit breaker

For emergencies, a circuit breaker from ARMTECH has been installed, which isolates all electrical circuits.

The system is activated by the driver via the green button on the centre console and disabled with the red button (circuit interrupted). To deactivate externally there is a big red button located on the right below the windscreen, marked with a triangular sticker.

**Button position**
**(Standard centre console)**

**Button position**
**(Display console TMG Option Part)**

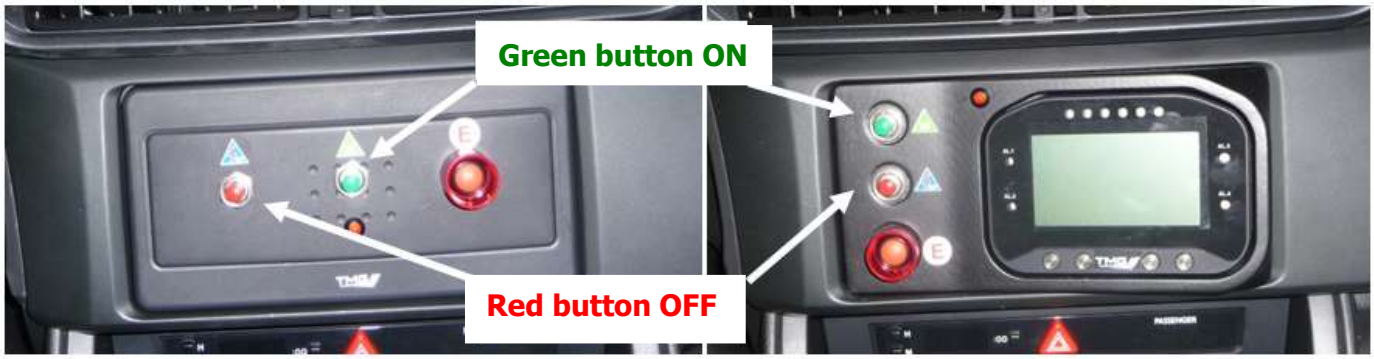


**External button position below the windscreen**

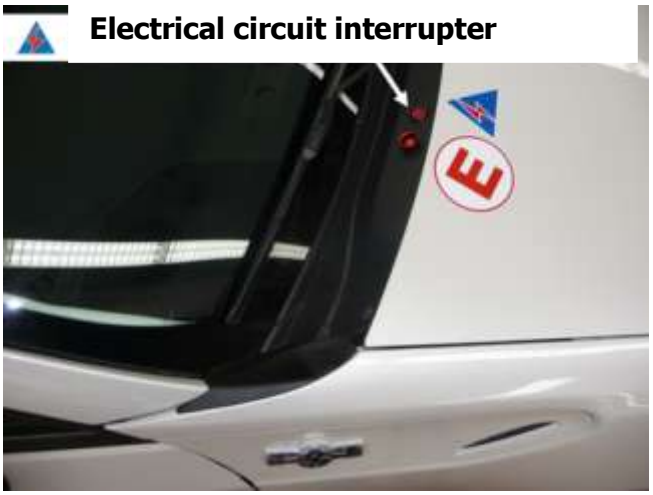

**Note!**
Generally, prior to the deactivation of the system, the engine, if necessary, is to be switched off. In addition, it is necessary to make sure that if the engine has been switched off the system is deactivated otherwise the battery may be discharged.

**Note!**
**During pit stops the engine should always be switched off with the ignition key and NOT the circuit breaker as this could mean the collected data in the engine control unit will be lost and the engine will have less power for a certain period of time.**

For more detailed handling of the circuit breaker refer to the documentation in the appendix.

Detailed documentation and software are available in the download section of the online Spare Parts Catalogue.

## 6.2 Fuse assignment

**Engine compartment**

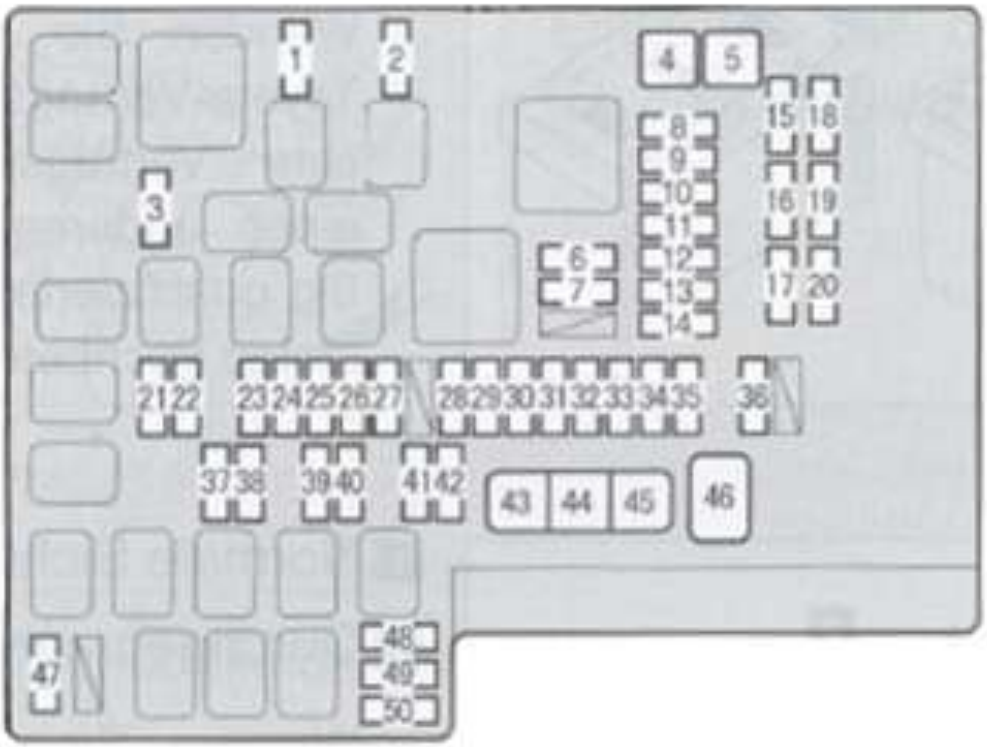

| Fuse | Amps | Circuit |
|---|---|---|
| 1 | 7.5A | Exterior mirror heating |
| 2 | 25A | Cooling fan |
| 3 | x | |
| 4 | 40A | ABS |
| 5 | 50A | Air conditioning |
| 6 | 10A | Windscreen washer - front |
| 7 | 30A | Windscreen wipers |
| 8 | 30A | Heated rear window |
| 9 | 10A | Rear fog light |
| 10 | 28A | Driver's electric window |
| 11 | x | |
| 12 | 25A | --- |
| 13 | 25A | ABS |
| 14 | 25A | Driver's electric window |
| 15 | x | |
| 16 | x | |
| 17 | x | |
| 18 | x | |
| 19 | x | |
| 20 | x | |
| 21 | 7.5A | Starter motor |
| 22 | 7.5A | Charging system |
| 23 | 7.5A | Steering wheel lock |
| 24 | 20A | Central locking |
| 25 | x | |
| 26 | x | |
| 27 | x | |
| 28 | 15A | Motor controller |
| 29 | 15A | Electronic multi-nozzle injection system |
| 30 | 15A | Starting system |
| 31 | 7.5A | Motor controller |
| 32 | 15A | Turn signal, hazard warning flashers |
| 33 | 7.5A | Automatic air conditioner, instruments and meters |
| 34 | 20A | Electronic multi-nozzle injection system |
| 35 | 30A | SRS Airbag-System, Motor control |
| 36 | 30A | Interior lighting, wireless remote control, ECU main part |
| 37 | 7.5A | Horn |
| 38 | 7.5A | Horn |
| 39 | 15A | Left headlight (dipped) |
| 40 | 15A | Right headlight (dipped) |
| 41 | 10A | Left headlight (high beam) |
| 42 | 10A | Right headlight (high beam) |
| 43 | 30A | Electronic multi-nozzle injection system |
| 44 | 30A | Headlight cleaning |
| 45 | 40A | Starting system, motor controller |
| 46 | 80A | Power steering |

| | | |
|---|---|---|
| 47 | 15A | SRS-Airbag-System |
| 48 | 7.5A | Radio remote control, ECU main part |
| 49 | 20A | Interior lighting |
| 50 | 7.5A | Motor controller |
| | | |

**Dashboard**

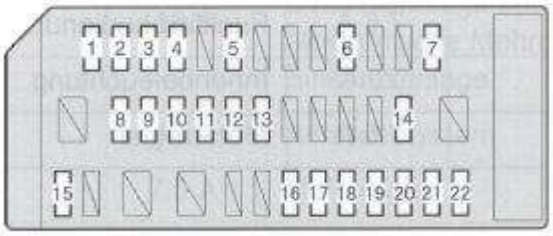


| Fuse | Amps | Circuit |
|---|---|---|
| 1 | 10A | ECU main part, external mirrors |
| 2 | 15A | Electric socket |
| 3 | 10A | Lighting |
| 4 | 10A | Rear lights |
| 5 | 10A | Daytime running lights |
| 6 | 7.5A | Brake lights |
| 7 | 7.5A | On-board diagnostic system |
| 8 | 7.5A | Air conditioning |
| 9 | 10A | Air conditioning |
| 10 | 10A | L/H fog light |
| 11 | 10A | R/H fog light |
| 12 | 7.5A | Reversing light |
| 13 | 10A | ABS, electric power steering |
| 14 | 7.5A | Starter motor |
| 15 | 15A | Audio system |
| 16 | 15A | Transmission |
| 17 | 7.5A | Instruments & meters, smart entry & starting system |
| 18 | 10A | Motor controller |
| 19 | 10A | L/H seat heating |
| 20 | 10A | R/H seat heating |
| 21 | 7.5A | Audio system |
| 22 | 15A | Socket<br>AIM Display **TMG Option Part**<br>AIM Data Logger **TMG Option Part**<br>Radio + **TMG Option Part** |

## 6.3 Relay assignment

**Dashboard**

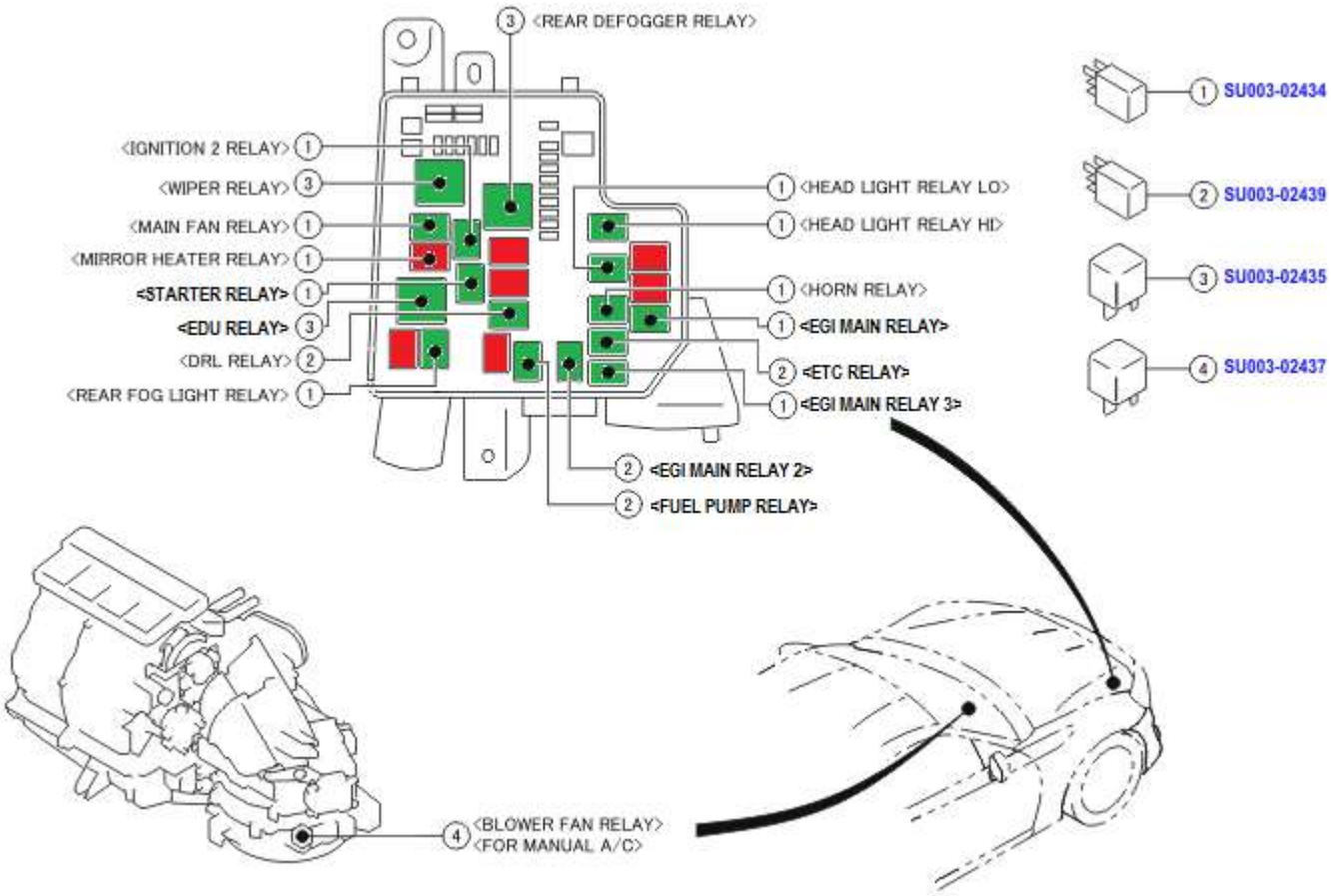


EDU = Relay fuel injection unit (direct)

DRL = Relay Daytime running lights

EGI = Relay fuel injection

ETC = Relay electronic accelerator pedal

# 7 Vehicle interior

## 7.1 Roll cage

Inside carets, insulation and panel have been removed and a roll cage has been welded in.


*Illustration not binding

Basically, only those roll cages with the corresponding weld-label are permitted.

**ID label**


The areas of the cage that can come into contact with the driver's helmet have been protected with cushioning material according to FIA Norm 8857-2001.

**TMG Race Part** Upholstery – TMG part no. DYX-0067023

## 7.2 Instruments / Meter / Display

A combination instrument with analogue display is fitted.

A multi-information display showing function switchover using ODO/TRIP switch or DISP switch and switch position indicator lamps is located on the liquid crystal display (LCD).

The ODO/TRIP switch and the DISP button to switch the display on the multi-information display are located in the TRIP switch on the right hand side of the instrument cluster.

The instrument combination unit has a built-in measuring instrument ECU and a buzzer.

With the ignition switch off the odometer or the trip odometer can be displayed by pressing the ODO/TRIP switch.

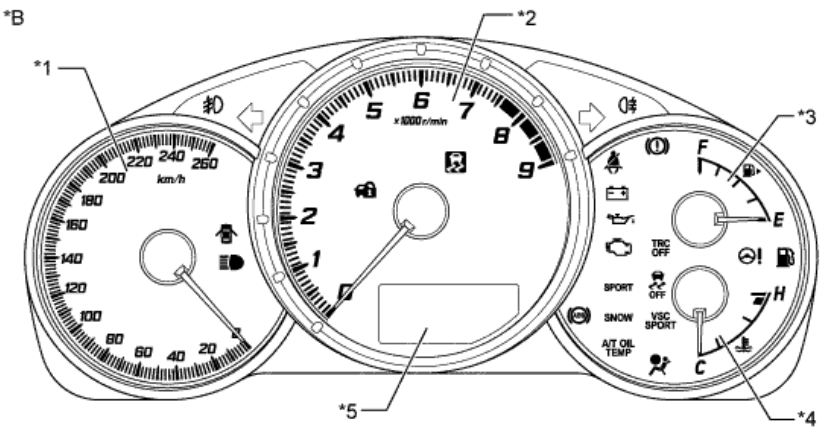


| | | | |
|---|---|---|---|
| *B | Model w/o digital speedometer | | |
| *1 | Speedometer | *2 | Rev counter |
| *3 | Fuel tank gauge | *4 | Water temperature gauge |
| *5 | Multi-information display | | |

**Please note: There is no additional warning lamp for the water temperature in the cockpit. The analogue instrument *4 is provided to view the current water temperature.**

**Alternatively, warning functions with reference to water temperature can be programmed into the data logger for output on the central display. See section 7.3 and the appendix to the data logger.**

## Functions of the multi-information display

| Display | Test display | Overview |
|---|---|---|
| ODO 123456km | Odometer Display | Displays Odometer. |
| TRIP A 123.4km | Trip odometer for display A | Displays trip meter A. |
| TRIP B 123.4km | Trip odometer for display B | Displays trip meter B. |
| G-on | for manual transmissions* 1 (at IG OFF) | • Indicates whether the display control for the switching and gear change indicator for manual transmissions is switched off.<br>• When the ignition is off and the trip meter B is displayed quickly pressing the ODO/TRIP switch will switch to the display for adjusting the gear change and upshift indicator. If the ODO/TRIO switch is held down, toggling between on and off is possible.<br>• Basic settings are switched off. |
| OUTSIDE P 23 °C | Outside temperature display | Displays outside temperature.*2 |
| P 13.4 km/l | Instantaneous fuel consumption display | • Displays the value which is calculated by the combination meter, based on the distance travelled and the fuel consumption rate.<br>• The display is constantly updated. |

| | | |
|---|---|---|
| REV. P --00 | Display to adjust the rev counter/display red range *3<br>(Only when the vehicle is stationary) | • Displays the speed range in which the rev counter lamp begins to light up.<br>• When the DISP button is held down while the display for adjusting the rev counter/red area is displayed the unit switches to the adjustment mode. The revolution range (2000-7400), in which the rev counter lamp will display and the buzzer for revolution/red zone is turned on/off, can be adjusted.<br>• When setting the rev counter display with the ignition turned on, the rev counter lamp will come on and the tachometer will display the set speed range for one second.<br>• By default the feature is turned off. |

*1: Models with manual transmission
*2: The display of the outside temperature depends on the vehicle speed and is not updated when the vehicle is stationary (low vehicle speed), which is, however, normal.
*3: Models with rev counter display/red zone indicator.

## Switching the multi-information display

The display of the multi-information display changes when the ODO/TRIP or the DISP switch is pressed in the order shown below.

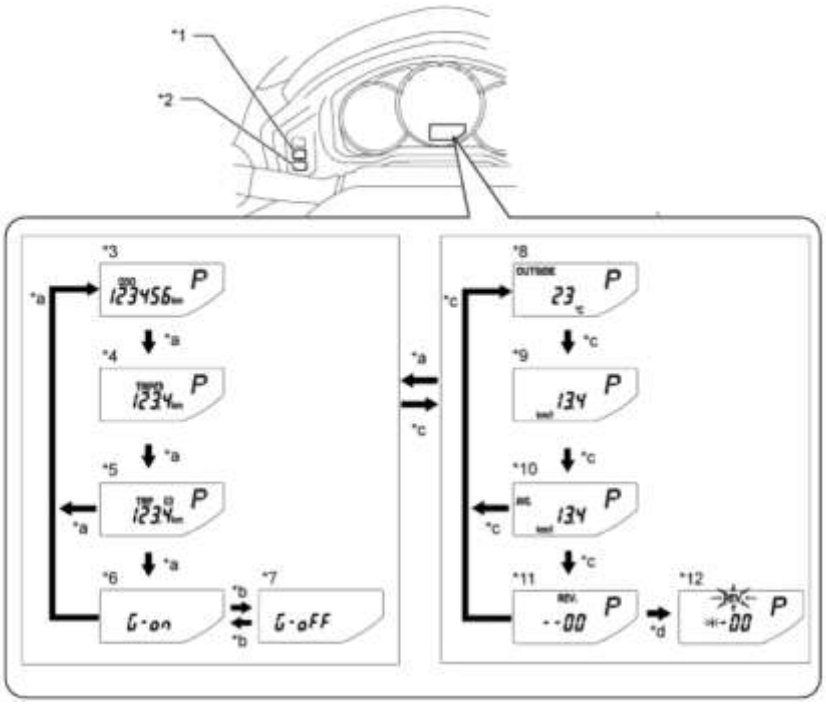

| | | | |
|---|---|---|---|
| *1 | ODO/TRIP switch | *2 | DISP switch |
| *3 | Odometer display | *4 | Trip meter A display |
| *5 | Trip meter B display | *6 | Display for gear adjustment and gear change display for manual transmissions: G-on (models with manual transmissions) (at IG OFF) |
| *7 | Display for gear adjustment and gear change display for manual transmissions: G-on (models with manual transmissions) (at IG OFF) | *8 | Outside temperature display |
| *9 | Instantaneous fuel consumption display | *10 | Average fuel consumption display after fuelling up. |
| *11 | Display for adjusting the rev counter display/display red zone (models with rev counter display/ display red zone) (with stationary vehicle) | *12 | Adjustment mode for the display for adjusting the rev counter display/display red zone (models with rev counter display/ display red zone) (with stationary vehicle) |
| *a | ODO/TRIP switch quick press | *b | ODO/TRIP long press |
| *C | DISP switch short press | *D | DISP switch long press |

**Setup mode display to adjust the rev counter display/red zone indicator**

The revolution range (2000 - 7400), in which the rev counter lamp starts to display and the buzzer for the revolution/red zone is turned on/off, can be adjusted.

If the average fuel consumption is displayed with the vehicle stationary and the DISP switch is quickly pressed, the display will change to adjustment mode for the rev counter display/display red zone. If the DISP switch is held down the display will change to setting mode.

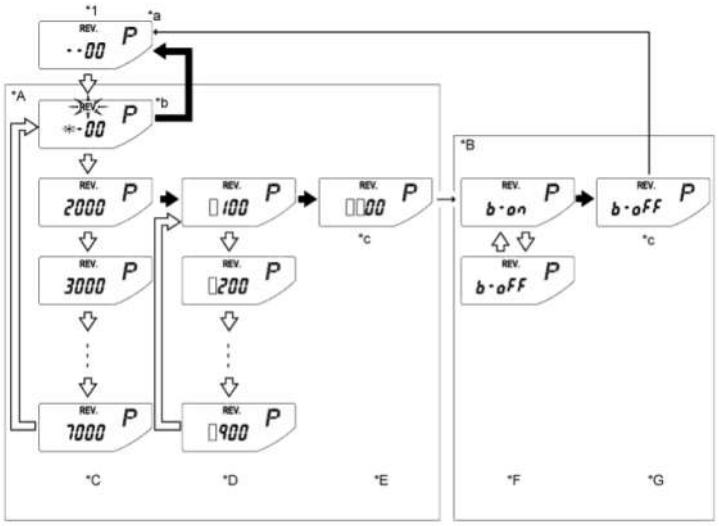

| | | | |
|---|---|---|---|
| *a | Setting mode for rev range display | *b | Setting mode for buzzer revs/red zone on/off |
| *C | Setting screen for 1000s | *D | Setting screen for 100s |
| *E | Confirmation screen for rev zone | *F | Setting screen for buzzer on/off |
| *G | Confirmation screen for buzzer setting | - | - |
| *I | Display for adjusting rev counter display/display red zone | - | - |
| *a | Start display. Displays the previous rev counter zone setting, insofar as a value is there | *b | "REV." and the adjustable area blink in setting mode |
| *C | Input invalid (Displays for one second) | - | - |
| ▪ | DISP switch short press | ▪ | DISP switch long press |
| ▪ | Automatic change | [] | Setting |

### 7.2.1 Explanation of the warning lights in the combination instrument

The following warning lamps can light up:

**Charging indicator**
Indicates a malfunction in the charging system of the vehicle.

**Warning lamp for low oil pressure**
Indicates a too low oil pressure.

**Warning lamp for the Antilock Braking System**
*Deactivated in this vehicle.*

**Warning lamp for the electric power steering (warning buzzer)**
*Indicates a malfunction in the EPS system.*

**Check engine lamp**
*Indicates a malfunction in the following systems:*

- *Electronic engine control*
- *Electronic engine power control*

**Control lamp for wheel slip**
*Indicates a malfunction in the following systems:*

- *VSC- system (Vehicle Stability Control)*
- *TRC system (traction control)*

**Warning lamp for the braking system**
*Lights up when the brake fluid level is too low or the handbrake has not been properly released.*

TRC OFF

**Indicator lamp TRC OFF**
*Lights up when the TRC system has been deactivated.*

VSC SPORT

**Indicator lamp VSC Sport**
*Lights up when TRC is disabled or the VSC SPORT mode has been selected.*

OFF

**Indicator lamp VSC off**
*Lights up when TRC is deactivated or VSC SPORT has been selected.*

**Door warning lamp**
*Indicates that a door is not properly closed.*

**Warning lamp for low fuel reserve**
*Indicates that the remaining fuel level is approx. 7 litres, or less.*

## 7.3 Data logger system TMG Option Part

The available option TMG data logger system includes a data logger and an external display.

The data logger system records the measured values of the series sensors, which are provided by the series control unit taken from the OBD-2 connectors.

The values are displayed on an external display, located centrally on the dashboard. In addition, the recorded vales can be transferred to a laptop via the interface supplied.

The following data are recorded or can be displayed:

Oil temperature: engine
Engine coolant temperature
Brake light switch signal
Brake pressure
Acceleration X-, Y-, Z axes
Engine water temperature
Steering angle
Vehicle speed from wheel speed
Vehicle speed per GPS
Current GPS position
Lap times, fastest lap and difference

**Data logger**

**Display**

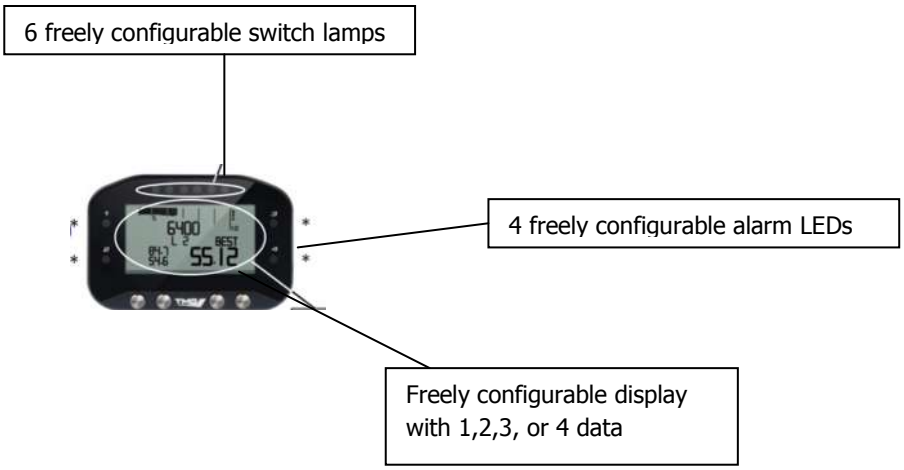


**Centre console with display**

**TMG Option Part** Kit Data logger incl. display – TMG part no. DYXAJ353009-00-A01

Detailed documentation and software are available in the download area of the online Spare Parts Catalogue.
Access only with username and password

## 7.4 Restraint system

All standard restraint systems such as airbags and 3-point seat belts have been removed.

The following 6-point racing seat belt has been fitted:

**TAKATA Race 6 HANS black**


**TMG Race Part** 6-point safety belt – TMG part no. DYX00-67028

When adjusting the straps, make especially sure that the shoulder straps keep to the angle of 0°-20° to the rear. Depending on the height of the driver, including the HANS system, it may mean that the seat has to be adjusted too.

## 7.5 Seat

The following seats are fitted:


2013 Specification


2014 Specification

Optional XL seats are available,

approx. 25-30 mm wider seat and an about 40 mm higher shell.

**2013**

| | |
|---|---|
| **TMG Race Part** | Seat TMG standard – TMG part no. DYX00-67025 |
| **TMG Option Part** | Seat TMG XL – TMG part no. DYX00-67037 |

**2014**

| | |
|---|---|
| **TMG Race Part** | Seat TMG standard – TMG part no. DYX00-67054 |
| **TMG Option Part** | Seat TMG XL – TMG part no. DYX00-67055 |

**Note!**
**Each participant is responsible for seeing that the race seats comply with the currently valid homologation and are in an appropriate condition. Especially after an accident the seats may have to be replaced!**

### 7.5.1 Seat consoles

The seat attachment consists of the following parts:

**Seat base plate 2013**

**Seat base plate 2014**

**TMG Race Part**

Base plate seat adapter 2013

**LHD** TMG part no. DYXAJ131009-00-A01

**RHD**: TMG part no. DYXAJ131010-00-A01

Base plate seat adapter 2014

DYXAJ131015-00-A01

DYXAJ131016-00-A01

**Running rail kit**

The running rails allow a horizontal adjustment range of approx. 150mm.

**TMG Race Part** Running rail set seat adapter – TMG part no. DYX00-67027

**Seat console set 2013**


**Seat console set 2014**

**TMG Race Part**

Console seat adapter 2013

TMG part no. DYX00-67026

Console seat adapter 2014

TMG part no. DYX00-67056

## 7.6 Pedals and foot well

All standard rubber protection has been removed from the pedals and replaced with a non-slip coating film.

In the heel area of the floor a flat aluminium plate has been fitted, which is also coated with a non-slip film.

An aluminium plate has also been mounted on the body panel as a footrest for the clutch foot.

**Illustration**

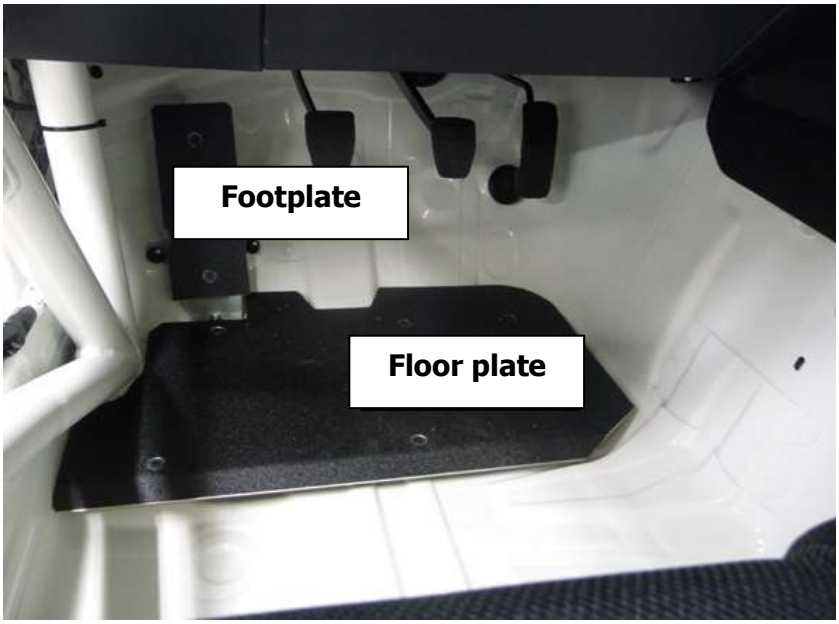


**TMG Race Part** Foot plate – TMG part no. DYXAJ130003-00-A01

**TMG Race Part** Floor plate – TMG part no. DYXAJ130001-00-A01

**In principle, the covering of the foot pedals and the foot/floor plate in the GT86 CUP is optional**

## 7.7 Heating

There is a simple heating system installed with control functions for the positioning of the fresh air/heating vents, fan speed and air temperature

**Air vents**

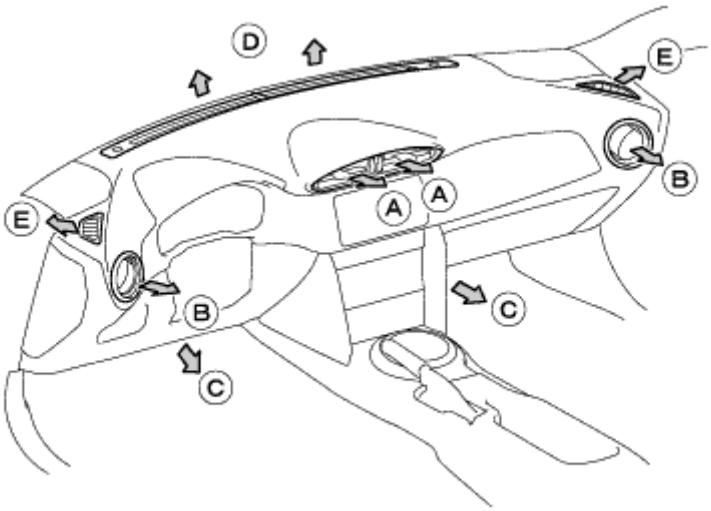


**Air flow volume**

| Display | Mode | Head room | | Foot room | Defroster | |
|---|---|---|---|---|---|---|
| | | Middle | Side | | Font | Side |
| | | A | B | C | D | E |
| | Face | O | O | - | - | - |
| | Head/Feet | o | o | o | - | - |
| | Feet | - | o | O | o | o |
| | Foot zone and defroster | - | o | O | O | O |
| | Defroster | - | o | - | O | O |

The size of the circle indicates the airflow quantity

## 7.8 Fire extinguisher system

A Lifeline fire extinguishing system type **zero 2000** with 4.0 litres of extinguishing medium has been installed. The system can be triggered by a red button from the inside (centre console), or from the outside (to the right below the windscreen).
The buttons are marked with a red "E".

The fire extinguisher must be checked at least every two years. Please contact GT86 CUP technical support, if necessary.

In the event of an accident without the activation of the extinguishing system, a functional test should be made according to the manual.
In the event of an accident with the activation of the extinguishing system, this is then to be sent to Lifeline or an authorised dealer to be examined and refilled.

**Interior button location**

Standard centre console

Display centre console **TMG Option Part**

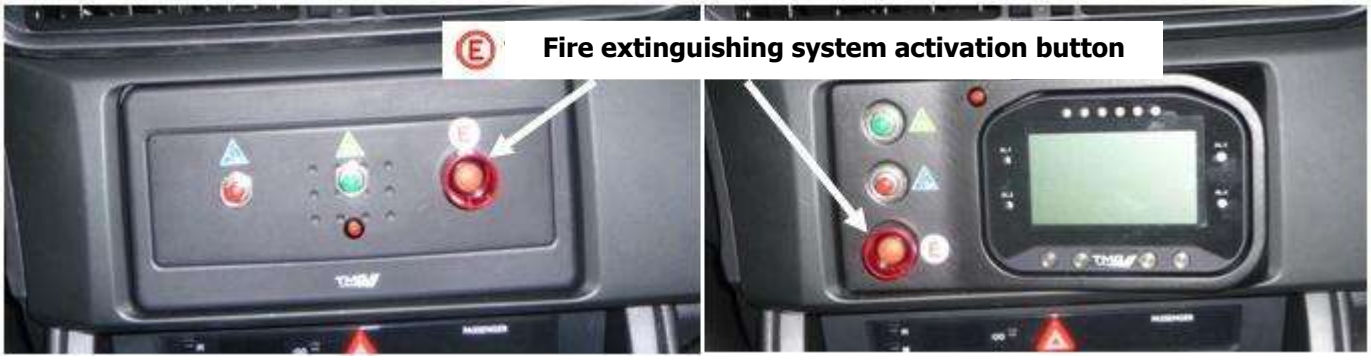

**Exterior button location**


**Interior location of nozzles**

**Engine room nozzle location**

**Note!**
The extinguishing system is NOT operable in the delivery status. To make it operable the red cap (1) of the "Power Pack Unit" (battery box) must be removed in order to free the switch for the appropriate mode and to insert the plug (2) on the release head of the extinguishing fluid container (see illustration).

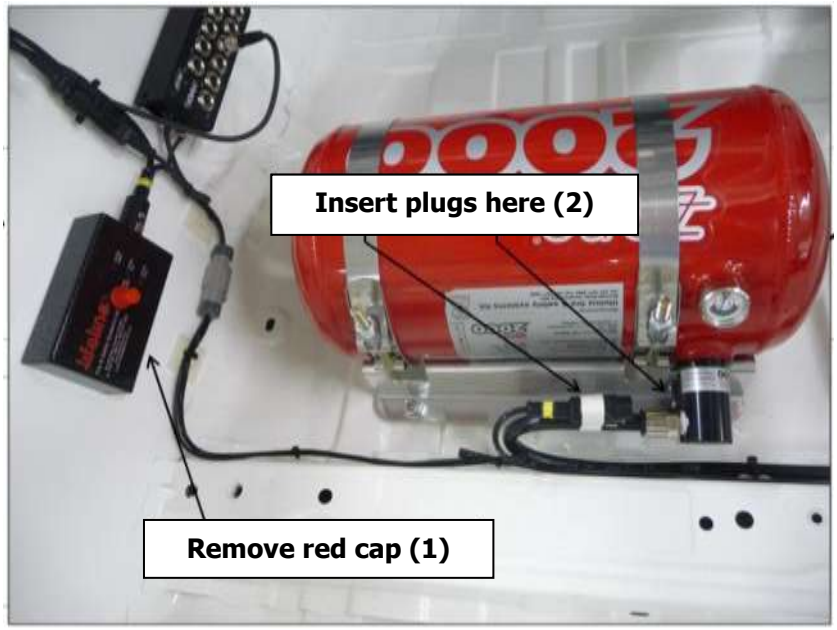


**Please refer to the operating instructions in the appendix for the handling and testing of the automatic fire extinguishing system.**

Detailed documentation and software are available in the download area of the online Spare Parts Catalogue.
Access only with username and password

## 7.9 Window net

On the driver's side a **TAKATA window safety net** including fixing has been fitted.

**TMG Race Part** Window net – TMG part no. DYX00-70646

# 8 Vehicle exterior

## 8.1 Chassis

Chassis dimensions

| | |
|---|---|
| Overall length | 4240 mm |
| Overall width | 1775 mm |
| Wheelbase | 2570 mm |
| Front overhang | 845 mm |
| Rear overhang | 825 mm |

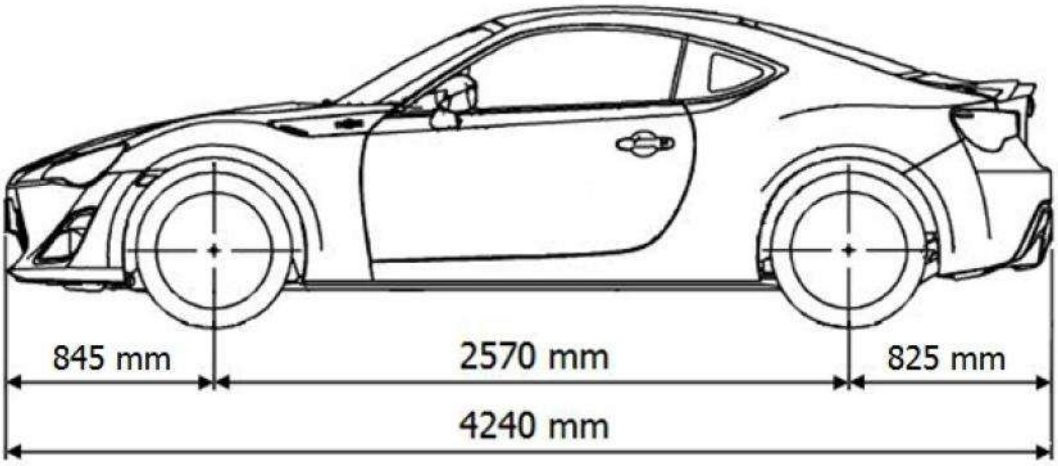


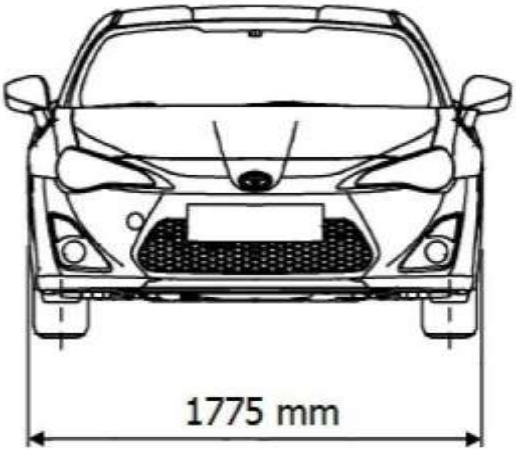

## 7.10 Initialising the windows

i. Open the door window halfway as shown in the illustration

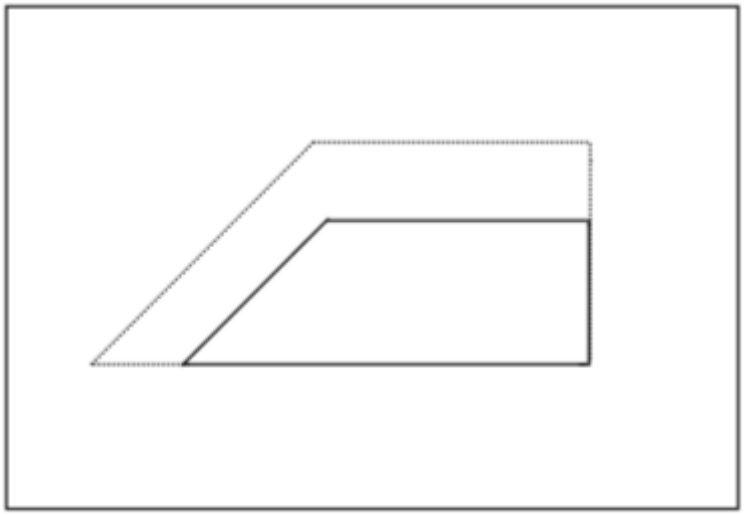

ii. Activate the window closing switch (hold down the switch that automatically closes the window) to close the window completely. Then hold the switch down for at least one second to reset the door position and complete the initialisation.

**NOTE:**

- **Complete the initialisation for the passenger side with the switch for the passenger side.**
- **The passenger door window can first be operated after the initialisation with the window operating switch**
- **The automatic opening/closing and the reverse function can only be used after the initialisation routine has been completed**
- **The earthing points of the door contacts must be checked.**

### 8.1.1 Jacking points

The body is reinforced at four points with a square profile so as to facilitate the jacking up of the vehicle. Each of the points is in front of or to the rear of the wheel arch cut-outs in front of a panel fold of the doors.

**Location**

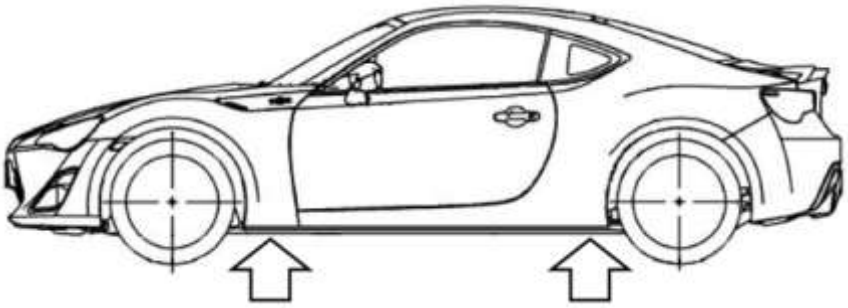

**Profile**

## 8.2 Windscreen washer fluid container

In order to integrate the brake cooling hoses in the front of the vehicle on the left the standard windscreen washer fluid container has been replaced with a customised version.

**TMG Race Part** Container screen washer fluid – TMG part no. DYXAJ134004-00

## 8.3 Glazing & safety film

All glazing corresponds to the glazing on standard models.

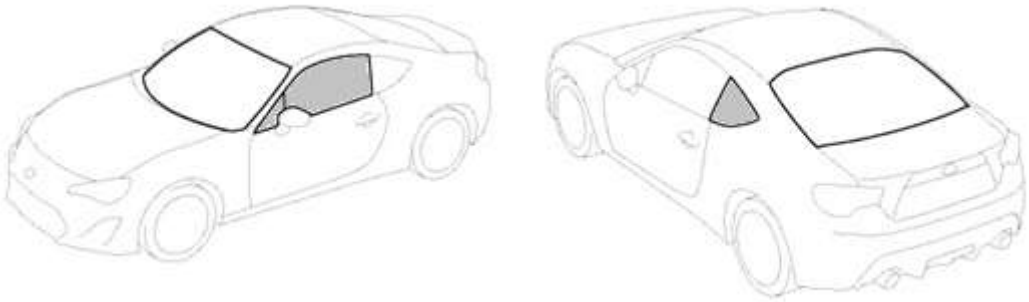

The grey shaded areas of glass have been, according to the regulations for VLN production cars and guidelines of the DSMB (handbook blue part) laminated with a clear safety film.

**TMG Race Part** Safety film – TMG part no. (on request)

General type approval of the safety film:

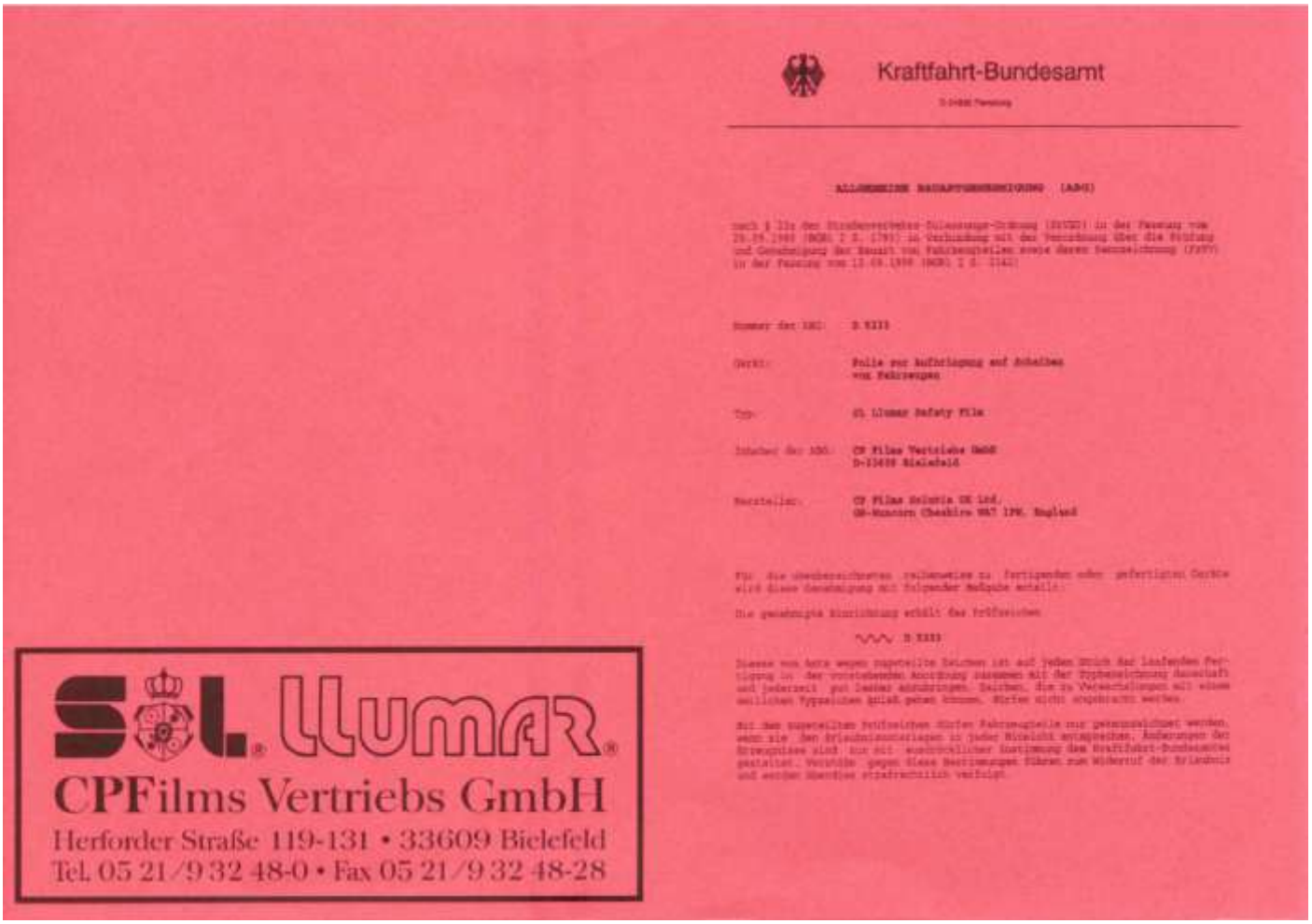

Kraftfahrt-Bundesamt

[illegible]

ABG Nr. D 5233

-3-

Die Einzelergebnisse der rechnerischen Prüfung müssen mindestens den Bedingungen entsprechen, die in den "Technischen Anforderungen an Fahrzeugteile bei der Bauartprüfung nach § 21a StVZO" vom 09.07.1970 unter Berücksichtigung der am 23.02.1994 in Kraft getretenen Fassung sowie dem Schreiben zur TA Nr. 29, Abschnitt 1.8, aufgeführt sind.

Die Folien, Typ **3M Lizmar Safety Film**, dürfen zum vorbeugenden Aufbringen an der Innenseite von Fahrzeugscheiben (außer an Windschutzscheiben) mit folgenden Merkmalen gefertigt und geliefert werden.

| | |
|---|---|
| Art des Werkstoffes: | **Polyesterfolie** |
| Dicke der Folie: | **0,11 mm ± 10 %** |
| Anzahl der Schichten: | 1 |
| Färbung der Folie: | **farblos** |
| Art der Beschichtung: | **eine Seite ist mit einer Schicht zur Erhöhung der Kratzfestigkeit und die andere Seite mit einem PE-Kleber versehen.** |

Die Folien dürfen nur bis zur Scheibenhalterung auf den Scheiben aufgeklebt werden.

Ein Verklammern bzw. eine Verklebung der Folie mit der Scheibenoberfläche oder der Gummidichtung ist unzulässig.

Die Verwendung der Folie an Scheiben, die für die Sicht des Fahrzeugführers von Bedeutung sind,

- ist eingeschränkt auf farblose Einscheiben-Sicherheitsglas (ESG) mit einer Dicke bis zu 8 mm und

- erfordert bei

  a) der Typprüfung der Fahrzeuge nach § 21 StVZO,
  b) der Einzelprüfung nach § 21 StVZO oder
  c) der Begutachtung nach § 19 StVZO durch einen amtlich anerkannten Sachverständigen oder Prüfer für den Kraftfahrzeugverkehr, einen Kraftfahrzeugsachverständigen oder Angestellten nach Abschnitt 4 der Anlage VIIIb zur StVZO

  eine Überprüfung auf Einhaltung der zuvor genannten Bedingungen sowie auf vorschriftsmäßige Anbringung der Folie, insbesondere hinsichtlich Klassen- und Faltenfreiheit.

Im Falle c) ist der vorbeugende Anbau der Folie unter Angabe von

Fahrzeughersteller
Fahrzeugtyp und
Fahrzeugidentifizierungsnummer

auf dem im Abdruck dieser ABG enthaltenen Freiblatt oder auf einem Freiblatt entsprechend dem im Verkehrsblatt 1994, S. 148, abgedruckten Muster einer "Bescheinigung" die erfolgte Anbauabnahme zu bescheinigen.

Die Wirksamkeit der Betriebserlaubnis ist hiervon abhängig.

Kraftfahrt-Bundesamt

[illegible]

ABG Nr. D 5233

-3-

In einer mitzuliefernden Gebrauchsanweisung sind die Benutzer auf den eingeschränkten Verwendungsbereich, auf die besonderen Anbaubedingungen sowie darauf hinzuweisen, daß bei Anbringung der Folien auf Rückscheiben von Kraftfahrzeugen diesen mit einem weiten Außenspiegel ausgerüstet sein müssen.

Flensburg, den 31.07.2002
Im Auftrag

(Mayer)

KRAFTFAHRT-BUNDESAMT 414

Anlagen:
Rückbestimmungen und Rechtsbehelfsbelehrung
1 Einzelbestätigung nach § 19 Abs. 3 StVZO
Prüfzeugnis des Materialprüfungsamtes Nordrhein-Westfalen, Dortmund, Nr. 41 100128 vom 18.07.2000
Entwurf zur TA Nr. 29, Abschnitt 1.8

## 8.3 Towing devices

The vehicle is equipped as standard with the applicable, compliant, tow loops in the locations provided. Please be aware that these towing loops are to be replaced with ones in belt form in the case of damage or wear.

i

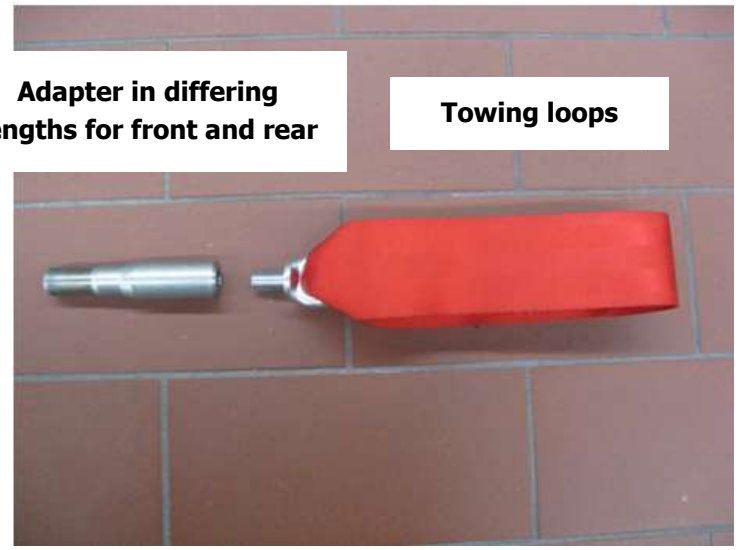


**TMG Race Part** Towing loops front and rear – TMG part no. DYX00-70647

**TMG Race Part** Adapter front – DYXAJ110002-00-A01

**TMG Race Part** Adapter rear – DYXAJ110001-00-A01

## 8.4 Body - Aero - Attachments

**Attention!**

It is explicitly pointed out here that all body parts of the aero package - in the standard available trim level - are not allowed in Cup.

Specifically they are the following components (marked in red):

**Front bumper attachment**

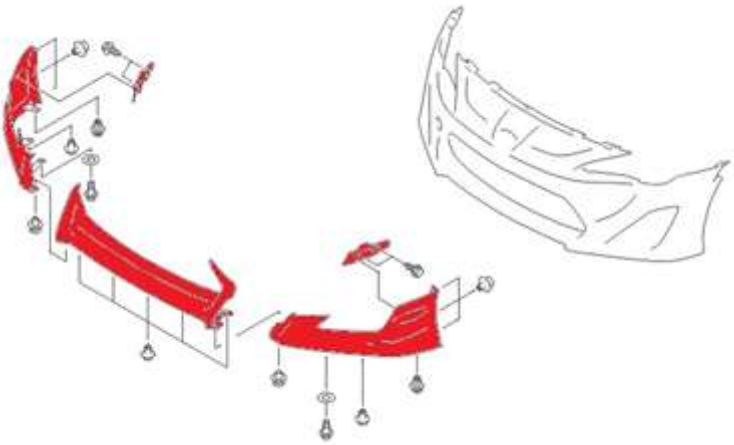

**Side sills attachment**

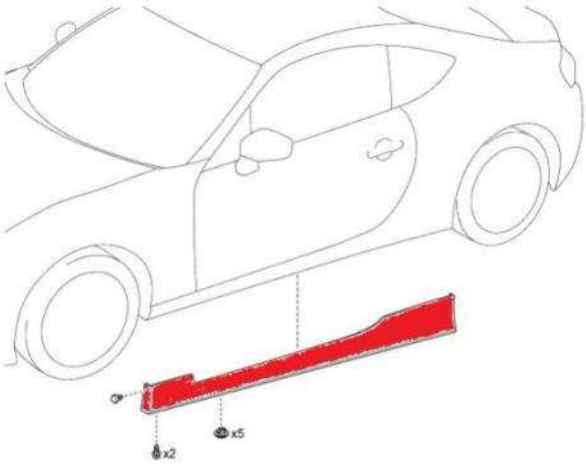

**Rear bumper attachment (3-piece)**

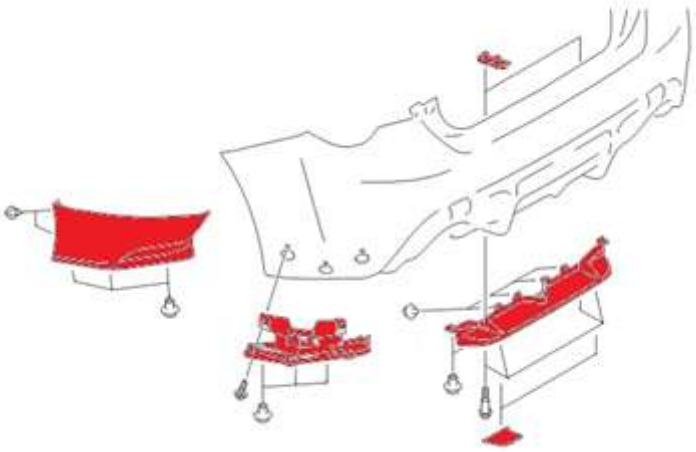

**Rear spoiler attachment**

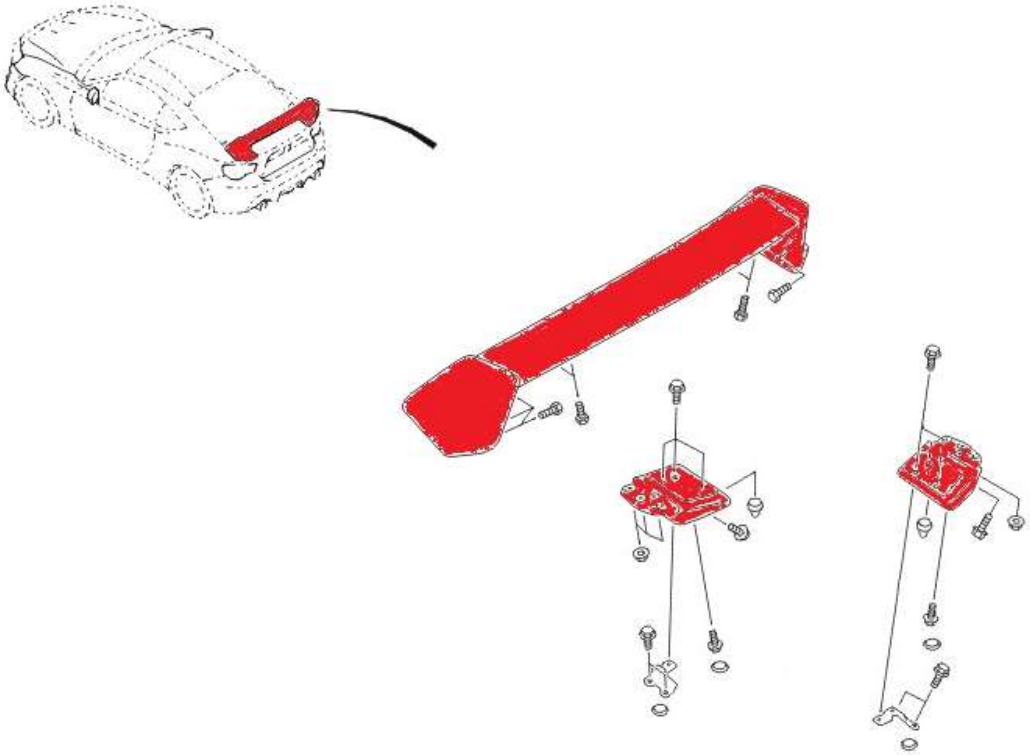

## 8.5 Colour codes

All CUP vehicles from 2013/2014 are delivered according to the following colour codes:

Exterior paintwork: **Toyota 37J**

Interior paintwork: **RAL9010**

## 8.6 Component identifications number and seals

The main components can be identified as follows:

**Chassis number:**

*Windscreen bottom left*

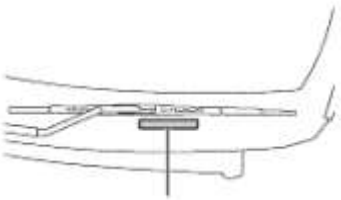

**Vehicle identification number**

*Cross brace, front passenger seat*

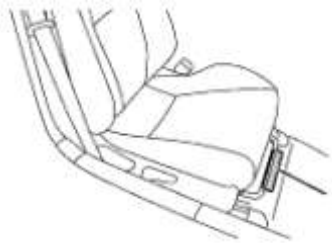

**Vehicle identification number**

**Engine:**

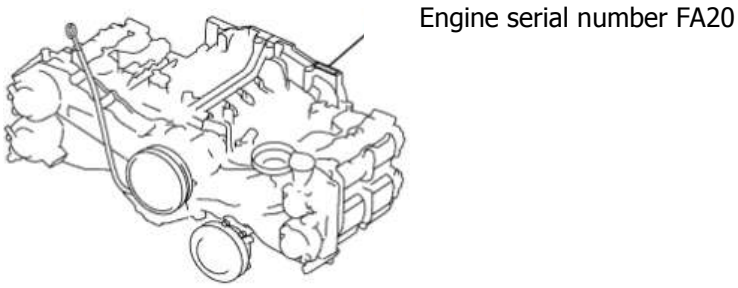


**Transmission:**

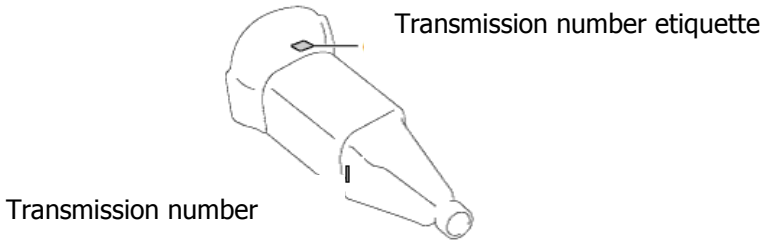


## 8.7 Seals

The seal for the engine is to be found on the upper screws of the L/H side of the cylinder head cover.

←←←←←←←
direction of travel

The seal on the transmission is located on the left side, next to the transmission serial number.

←←←←←←←
direction of travel

The seal for the differential is located on the right side, next to the transmission serial number.

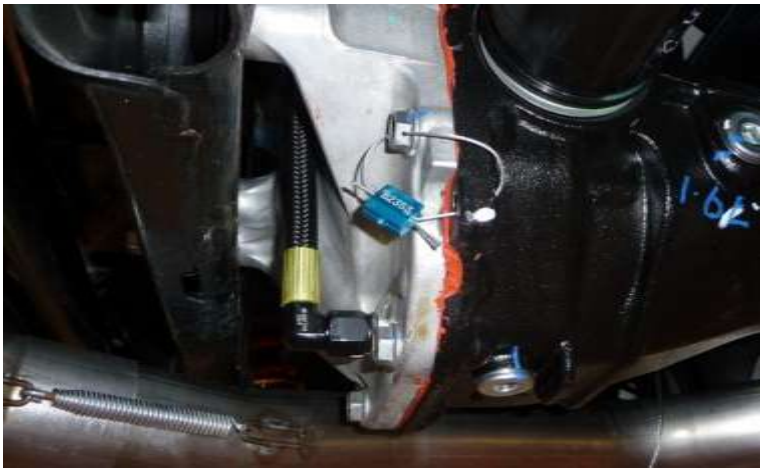

→→→→→→→
direction of travel

**NOTE!**

**The differential is sealed as a matter of principle as part of the TMG GT86 Cup. A personal check for the maintenance of the differential may be made after a previous written request (email is sufficient) to the TMG Cup organisation or Cup technical support.**

**The closing of the differential housing may only be performed under the supervision of the TMG Cup organisation or their representatives. This process is only possible on a Friday during the free practice sessions. Then the differential is again provided with a seal by the TMG Cup organisation or its representatives.**

**The seal that has been removed must be kept and handed over to the TMG Cup organisation for examining and matching.**

**=> See also: TMG GT86 Cup Regulations 2014**

## 8.8 Capacities

| | | |
|---|---|---|
| **Engine oil without filter** | **Elf HTX 825 10W-60** | **5.2 ltr** |
| **Engine oil with filter** | | **5.4 ltr** |
| | | |
| **Engine cooling water** | **(see 1.4.1)** | **7.2 ltr** |
| | | |
| **Transmission oil** | **Elf HTX 735 75W-90** | **2.2 ltr** |
| | | |
| **Rear axle oil standard (w/o cooling kit)** | **Elf HTX 755 80W-140** | **1.1…1.2 ltr** |
| **Rear axle oil standard (with cooling kit)** | **Elf HTX 755 80W-140** | **1.6 ltr** |
| **Rear axle oil Torsen (w/o cooling kit)** | **Elf HTX 755 80W-140** | **1.1…1.2 ltr** |
| **Rear axle oil Torsen (with cooling kit)** | **Elf HTX 755 80W-140** | **1.6 ltr** |
| | | |

## 8.9 Recommended tightening torques

| General | | |
|---|---|---|
| Wheel nuts | 120 Nm | |
| | | |
| **Motor** | | |
| Sparking plugs > cylinder head | 17 Nm | |
| Oil filter > engine | 14 Nm | |
| Oil drain plug > oil sump | 39 Nm | |
| Flywheel subunit > crankshaft | 85 Nm | Tighten crosswise |
| Clutch cover > flywheel | 16 Nm | Tighten crosswise |
| Front engine bearers > cross frames | 45 Nm | |
| Starter motor > engine top | 50 Nm | |
| Starter motor > engine bottom | 50 Nm | |
| Exhaust manifold > cylinder head | 30 Nm | |
| Front exhaust pipe > exhaust manifold | 35 Nm | |
| Lambda probe > exhaust manifold | 21 Nm | |
| Mix sensor > exhaust manifold | 21 Nm | |
| | | |
| **Transmission & Differential** | | |
| Gearbox > Engine | 50 Nm | |
| Transmission mounts > body (screws) | 65 Nm | |
| Transmission mounts > body (nuts) | 40 Nm | |
| Gear box housing > clutch housing | 29 Nm | |

| | | |
|---|---|---|
| Filler cap > transmission | 37 Nm | |
| Oil drain plug > transmission | 37 Nm | |
| Cardan shaft > chassis (centre bearing) | 52 Nm | |
| Cardan shaft > rear axle differential | 74 Nm | |
| Drive shaft > wheel hub | 260 Nm | Caulking |
| Differential cover > differential housing (8 pcs.) | 47 Nm | |
| Oil drain plug > rear axle differential | 49 Nm | |
| Oil filler plug > rear axle differential | 49 Nm | |
| Rear axle differential > front sub-frame | 95 Nm | |
| Rear axle differential > rear sub-frame | 62 Nm | |
| | | |
| **Front axle** | | |
| Shock absorber (piston rod) > strut bearing | 60 Nm | Bilstein specification |
| Strut bearing > chassis | 23 Nm | |
| Shift piece camber plate> strut bearing (Torx, 10.9) | 25N m | Bilstein specification |
| Suspension strut > wheel mounting | 155 Nm | |
| Stabilising coupling rod > suspension strut | 46 Nm | |
| Wheel mounting > lower wishbone (ball joint) | 51 Nm | Cotter pin |
| Tie rod > wheel mounting | 27 Nm | Cotter pin |
| Wishbone > front sub-frame | 85 Nm | |
| Wishbone > rear sub-frame | 110 Nm | |
| Front sub-frame > chassis | 95 Nm | |

| | | |
|---|---|---|
| Lateral sub-frame bracket > front auxiliary frame and chassis | 60 Nm | |
| Calliper anchor brackets > wheel mounting | 80 Nm | |
| Brake calliper (cylinder guide pin) > calliper anchor bracket | 26 Nm | |
| Brake hose > disc brake calliper (banjo bolt) | 18 Nm | Sealing washer |
| | | |
| **Rear axle** | | |
| Strut bearing > chassis | 30 Nm | |
| Shock absorber > lower wishbone | 80 Nm | |
| Wheel hub unit > wheel mounting | 65 Nm | |
| Upper wishbone > wheel mounting | 80 Nm | |
| Trailing arm > wheel mounting | 110 Nm | |
| Lower wishbone > wheel mounting | 80 Nm | |
| Tie rod > wheel mounting | 60 Nm | Cotter pin |
| Stabilising coupling rod > lower wishbone | 38 Nm | |
| | | |
| Upper wishbone > sub-frame | 90 Nm | |
| | | |
| Lower wishbone > sub-frame | 80 Nm | |
| Trailing arm > chassis | 110 Nm | |
| Tie rod > sub-frame (eccentric screw) | 100 Nm | |
| Stabilising bracket > sub-frame | 30 Nm | |
| | | |
| Calliper anchor brackets > wheel mounting | 66 Nm | |

| | | |
|---|---|---|
| Brake calliper (cylinder guide pin) > calliper anchor bracket | 26 Nm | |
| Brake hose > disc brake calliper (banjo bolt) | 18 Nm | Sealing washers |
| | | |
| **Steering** | | |
| Steering column unit > chassis | 40 Nm | |
| Intermediate shaft > steering column unit (cardan joint) | 35 Nm | |
| Intermediate shaft > steering gear (cardan joint) | 35 Nm | |
| Steering wheel hub > steering unit | 39 Nm | |
| Steering gear > sub-frame | 120 Nm | |
| Tie rod head > tie rod (locking nut) | 85 Nm | |
| Tie rod > rack (ball joint) | 103 Nm | |
| | | |

8.10 Overhauls

| Component | Check [km] | Change/Rebuild [km] | Notes |
|---|---|---|---|
| | | | |
| **Engine** | | | |
| Engine | | 10000 km | |
| Starter | | 10000 km | |
| Alternator | | 10000 km | |
| Fuel filter, in-tank (right & left chamber) | | 10000 km | on demand |
| | | | |
| **Transmission** | | | |
| Gearbox | 5000 km | 10000 km | |
| Rear differential Torsen | 5000Km | 10000 km | |
| Rear differential Std. | 5000Km | 15000 km | |
| Rear differential cooler oil filter | each race | | clean filter unit |
| Clutch | | 7500km | |
| **Suspension** | | | |
| Front damper | | 15…20 h* | * on demand<br>Service only via Bilstein |
| Rear damper | | 15…20 h* | * on demand<br>Service only via Bilstein |
| | | | |
| | | | |
| **Fluids** | | | |
| Engine oil | | 1000 km | incl. oil filter |
| Gearbox oil | | 1000 km | |
| Rear diff oil | | 1000 km | Clean filter if Diff. cooler installed |
| Brake fluid | | 2000 km | Depending on usage |

# 9 Tips and Tricks

1. Always let the engine warm up to an oil temperature of at least **65°C** before a race otherwise a reduction in performance can be expected (no damage to the engine is possible).

   ⇨ Prerequisite for full power is an oil temperature of 65° and an idle speed (<1000/min) of approx. 3 - 5 seconds.

2. When making a pit stop turn the engine off **only** with the ignition key and **not** with the main circuit switch (red button centre console).
   Otherwise a performance degradation due to the engine control unit having to re-learn.

3. Check the oil at best 30 minutes after stopping the engine so as to make an accurate reading and to prevent over filling. Due to the horizontally opposed configuration this long wait is really necessary to allow all the oil to collect in the sump.

   ⇨ With pit stops, because of the short period available, if necessary fill to 2-3mm below the maximum. Under no circumstances fill to the maximum, or overfill, during a pit stop. Power loss could be the result.

4. To guarantee a long life of the engine, transmission and differential in racing use it is recommended to change all oils after each race.
   The same applies to the brake fluid.

5. The gearbox fitted is a standard component with a fully synchronised 6-speed H-pattern gear stick. The stress and wear are therefore increasingly dependent on proper maintenance and handling.

   After each gear change remove your hand from the gear lever. Leaving your hand on the gear lever leads to disproportionately high wear of the internal gear components.

# 10 Appendix

**9.1 Appendix 1 Documentation ARMTECH Hybrid Battery Isolator**

**9.2 Appendix 2 Documentation AIM EVO4 User Manual**

**9.3 Appendix 3 Documentation AIM G-Dash Digital Display**

**9.4 Appendix 4 Documentation TAKATA Installation & Operating Instructions**

**9.5 Appendix 5 Documentation LIFELINE Zero 2000 Data Sheet**

**9.6 Appendix 6 Documentation LIFELINE Zero 2000 Fitting Instructions**

**9.7 Appendix 7 Documentation HJS Catalyst Homologation**

**All appendixes can be found stored as a separate file in the download section of the spare parts catalogue.**

**User name and password are required for this access.**